Proace, Expert, Jumpy, Scudo, Vivaro

Smartfloor Front Module Drawer Short L1 L2 1SLD

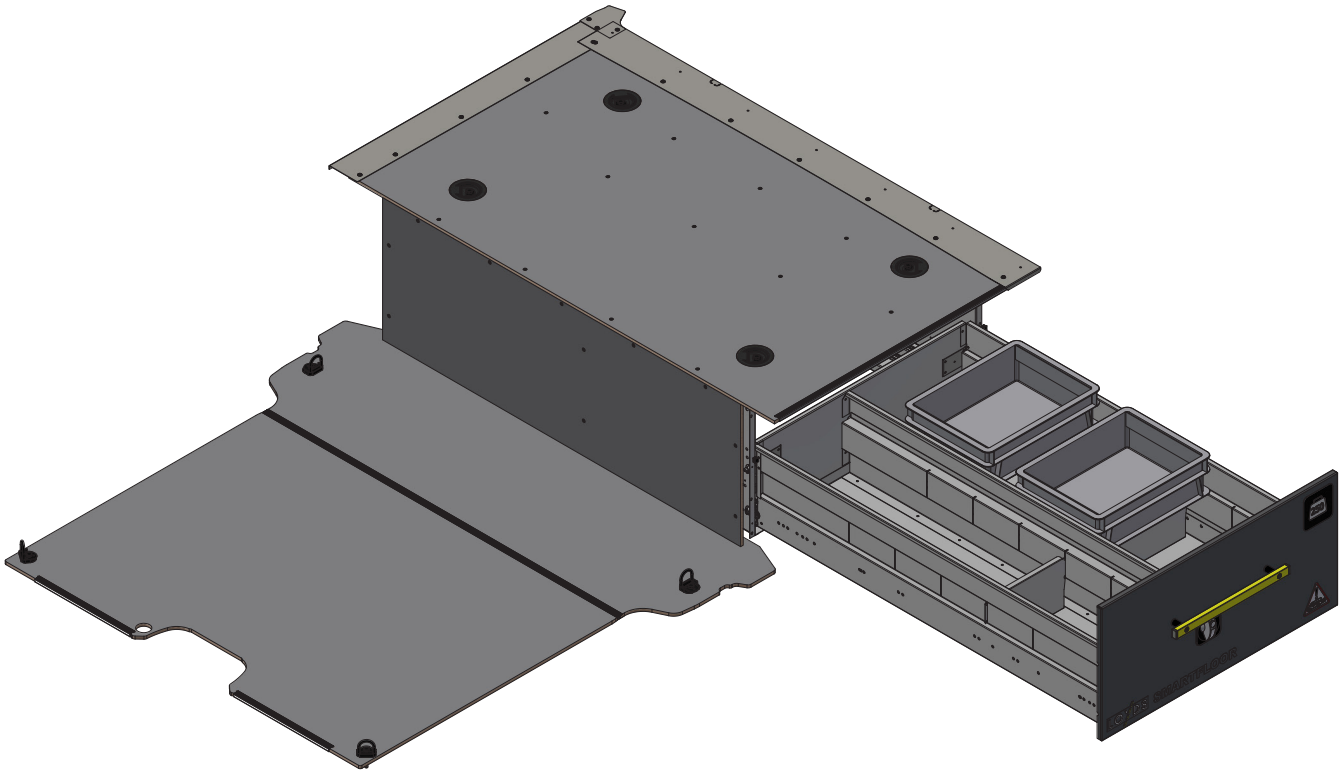

Installation Manual 15028923_B

Loyds Industri AS - 2026-02-09

LOYDS

Revision Record

Rev nr	Date	Page	Picture	Update	New	Deleted steps
A	2025-10-27				X	
B	2026-02-09	2		Added compatible cars		

Compatible cars

Toyota Proace from 2016
Peugeot Expert from 2016
Citroën Jumpy from 2016
Opel Vivaro from 2019
Fiat Scudo from 2024

Use colors when printing this installation manual. / Ved utskrift, bruk farger.

Tools

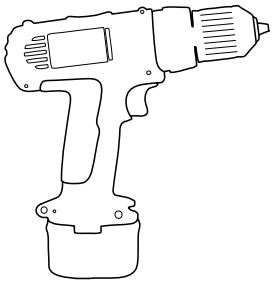

T25
T30

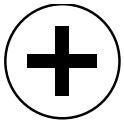

PH2

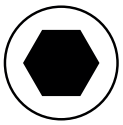

6 mm

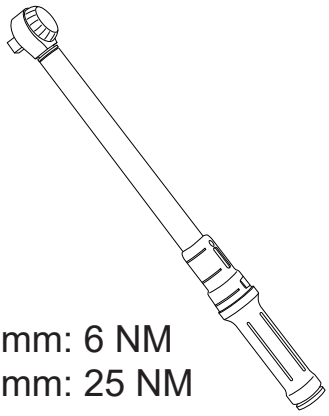

6 mm: 6 NM
8 mm: 25 NM

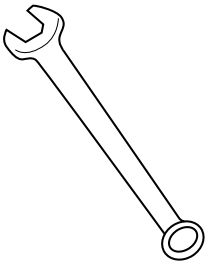

13 mm

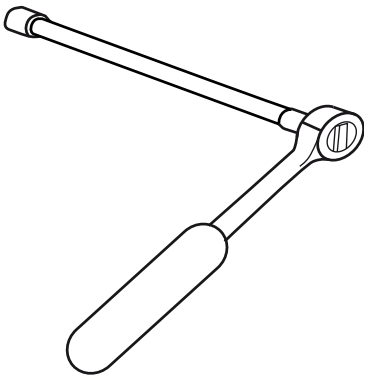

15024447 Front Module Drawer L1 L2 1SLD PEJ SF2020

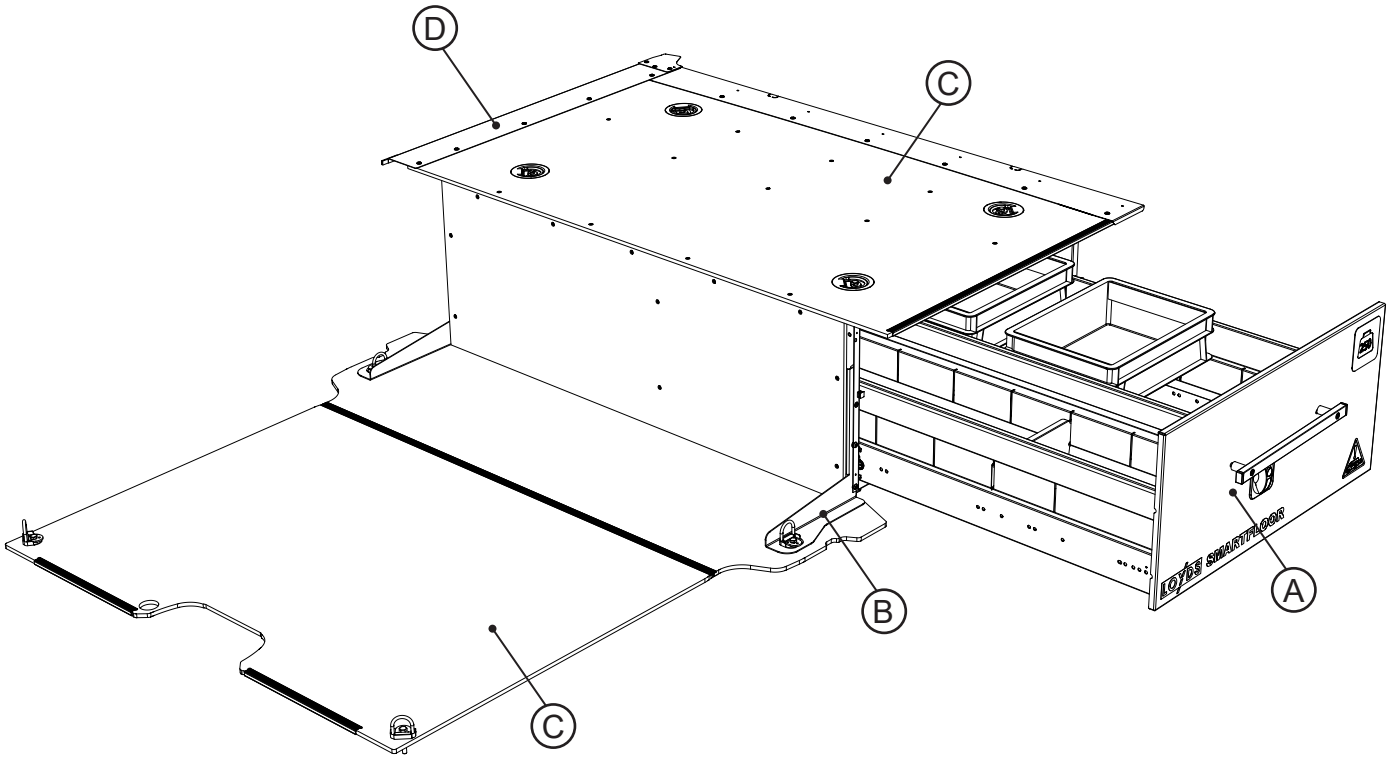

Number	Quantity	Part Number	Definition
A	1	15021294	Front Drawer FD1 W770 L1200 Main ASSY
B	1	15024454	Steelbracket Set Front Mod Drawer PEJ SF2020
C	1	15024455	Floor Set Front Mod Drawer L1 L2 PEJ SF2020
D	1	15025447	Floor Extend Kit Front Mod Drawer Left 1SLD PEJ SF2020

15024454 Steelbracket Set Front Mod Drawer PEJ SF2020

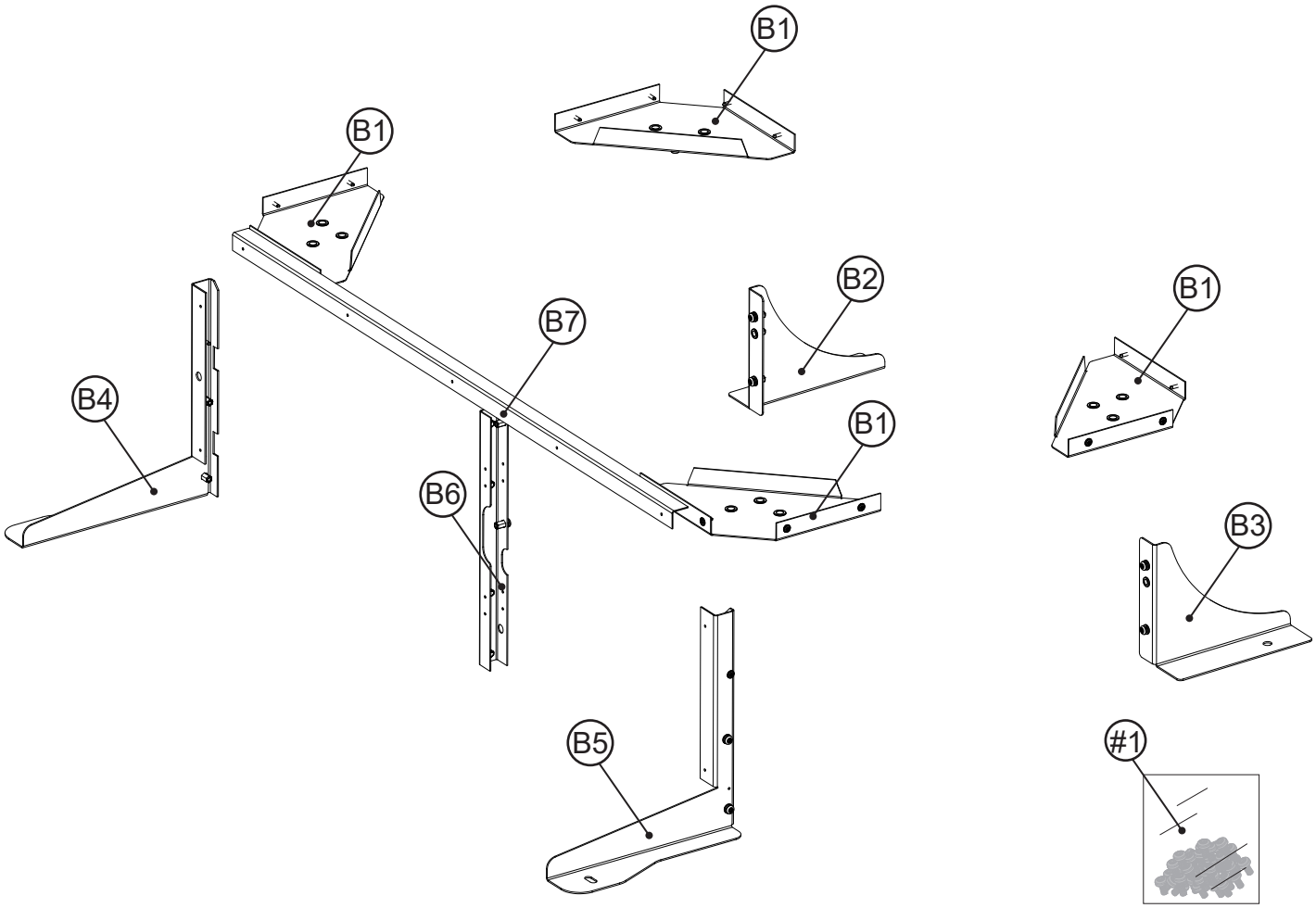

Number	Quantity	Part Number	Definition
B1	4	15018460	Bracket Latch Inner 8mm ASSY
B2	1	15021216	Bracket Front Left PEJ2020 ASSY
B3	1	15021215	Bracket Front Right PEJ2020 ASSY
B4	1	15025439	Bracket Rear Left Front Mod Drawer PEJ SF2020 ASSY
B5	1	15025438	Bracket Rear Right Front Mod Drawer PEJ SF2020 ASSY
B6	1	15021201	Bracket Vertical Floor Front Mod Drawer 2020 ASSY
B7	1	15021265	Angle Vertical Floor Half Mod Drawer
#1	1	15024456	Fitting Kit Steelbracket Set Front Mod Drawer L1 L2 PEJ

15024455 Floor Set Front Mod Drawer L1 L2 PEJ SF2020

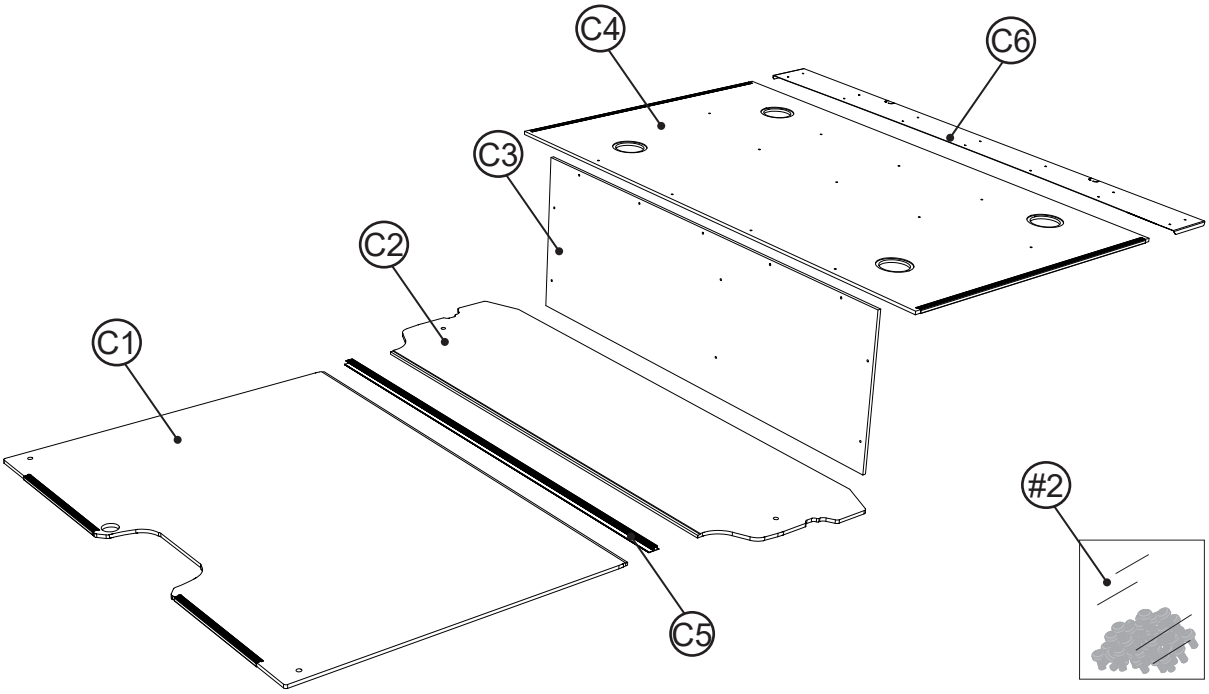

Number	Quantity	Part Number	Definition
C1	1	15025446	Floor Rear Original L1 L2 L3 PEJ SF2020
C2	1	15025444	Floor Middle Original L1 L2 PEJ SF2020
C3	1	15025442	Floor Vertical Front Module Drawer PEJ SF2020
C4	1	15025441	Floor Front Front-Module Drawer PEJ SF2020 ASSY
C5	1	15010793	H-Profile 9mm Floor L=1232
C6	1	15021239	Floor Extend Bracket PEJ2020
#2	1	15024457	Fitting Kit Floor Set Front Mod Drawer L1 L2 L3 PEJ 2020

15018478 Supplement Bracket Set 1SLD PEJ ASSY SE

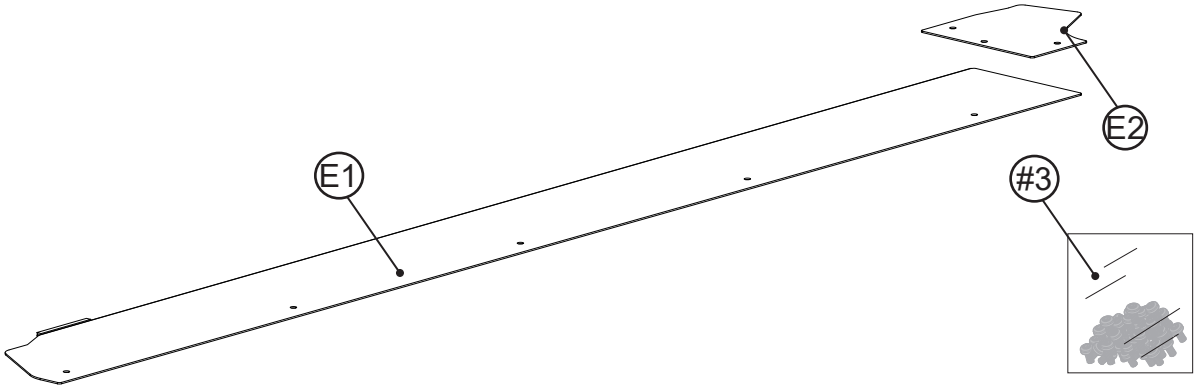

Number	Quantity	Part Number	Definition
E1	1	15018476	Supplement Floor 1SLD PEJ
E2	1	15018477	Floor Supplement 1SLD Orig Sep PEJ
#3	1	15018479	Fitting Kit Suppl Bracket Floor 1SLD PEJ

2x 15010236 Handle Assy

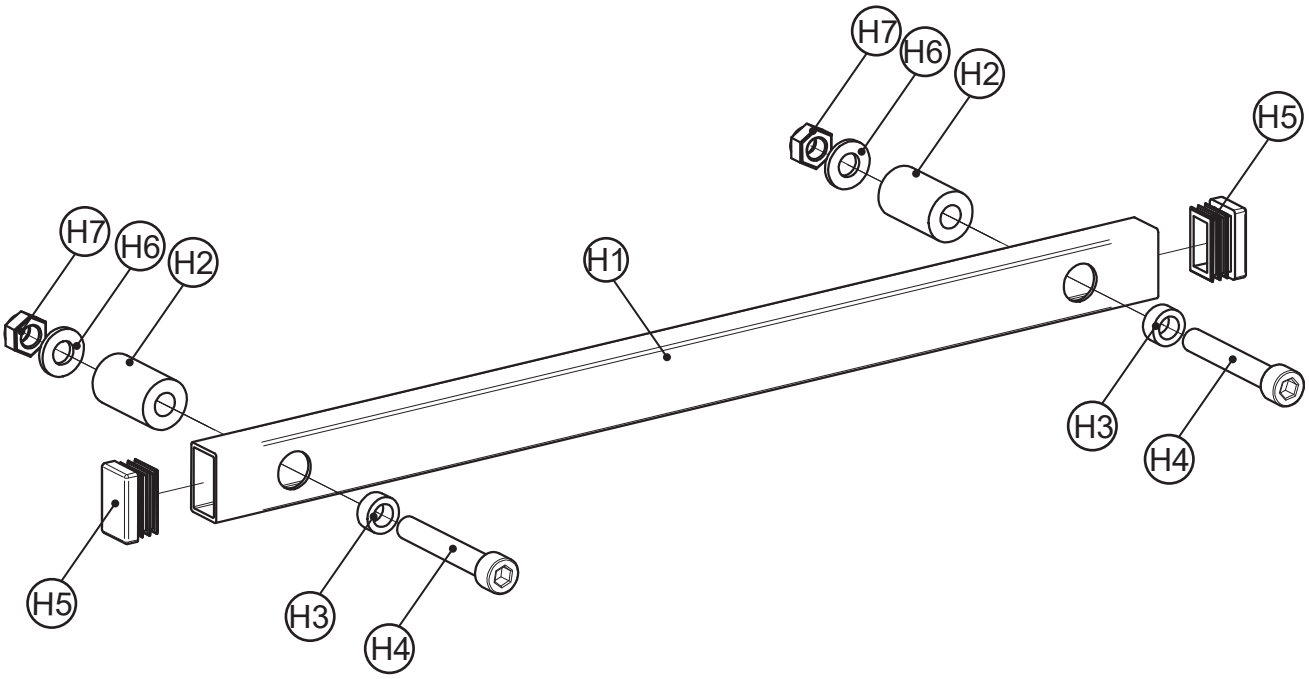

Number		Quantity	Part Number	Definition
H	H1	2	15009441	Handle Tube 25x15x286
	H2	2	15009443	Spacer Ø8,3x18x30 Nylon Black
	H3	2	15009443	Spacer Ø8,1x13x6mm Galv
	H4	2	15009444	Screw M8x50 Cylinderh Hex
	H5	2	15009438	End sleeve Black
	H6	2	8,4x17x2	M8 Washer, DIN 125
	H7	2	8 NMU	Mutter M8 Nyloc DIN985

#1 15024456 Fitting Kit Steelbracket Set Front Mod Drawer L1 L2 PEJ

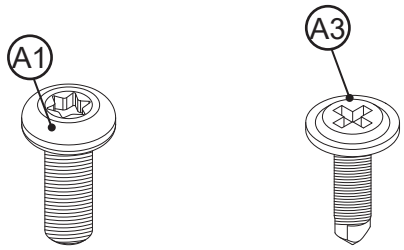

x10 **x18**

A1	15003551 M6x16 TX30 pan (DIN 7985)
A3	4,2x16 FL Screw Selfdrill flath elz

#2 15024404 Fitting Kit Floor Set L1 L2 PEJ SF2020

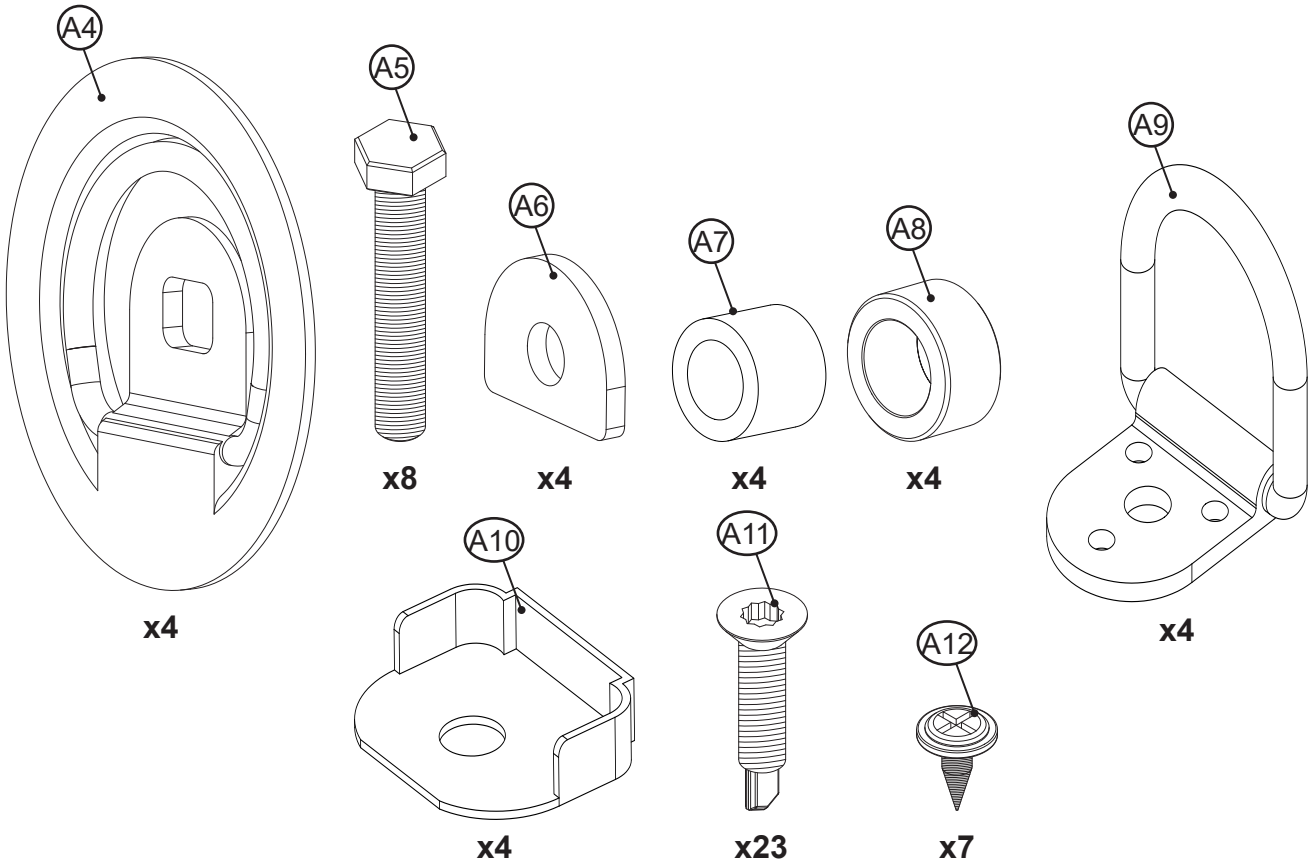

A4	15005497 Latch Cup Black Ø90 Ø12x15 1000Kp
A5	15004713 M8x50 screw, 6K DIN 933 Black, ElZn+Cr3
A6	15005884 Washer Latchcup for Ø8
A7	15001584 Distansehylse D20 d13 h15
A8	13x20x10 Spacer, U-710
A9	500250 Fixation Eye Typ 500/8mm
A10	500252 Plastic Cover Fixation Eye
A11	15016947 Screw 4,8x25 Selfdrill Counters EW25 Elz
A12	4,2x13 S Screw 4,2x13 Flathead Needle Black

#3 15018479 Fitting Kit Suppl Bracket Floor 1SLD PEJ

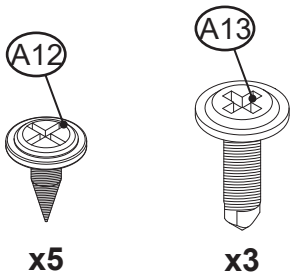

A12	4,2x13 S Screw 4,2x13 Flathead Needle Black
A13	4,2x16 FLS Platescrew selfdrilling E45759 Black

1

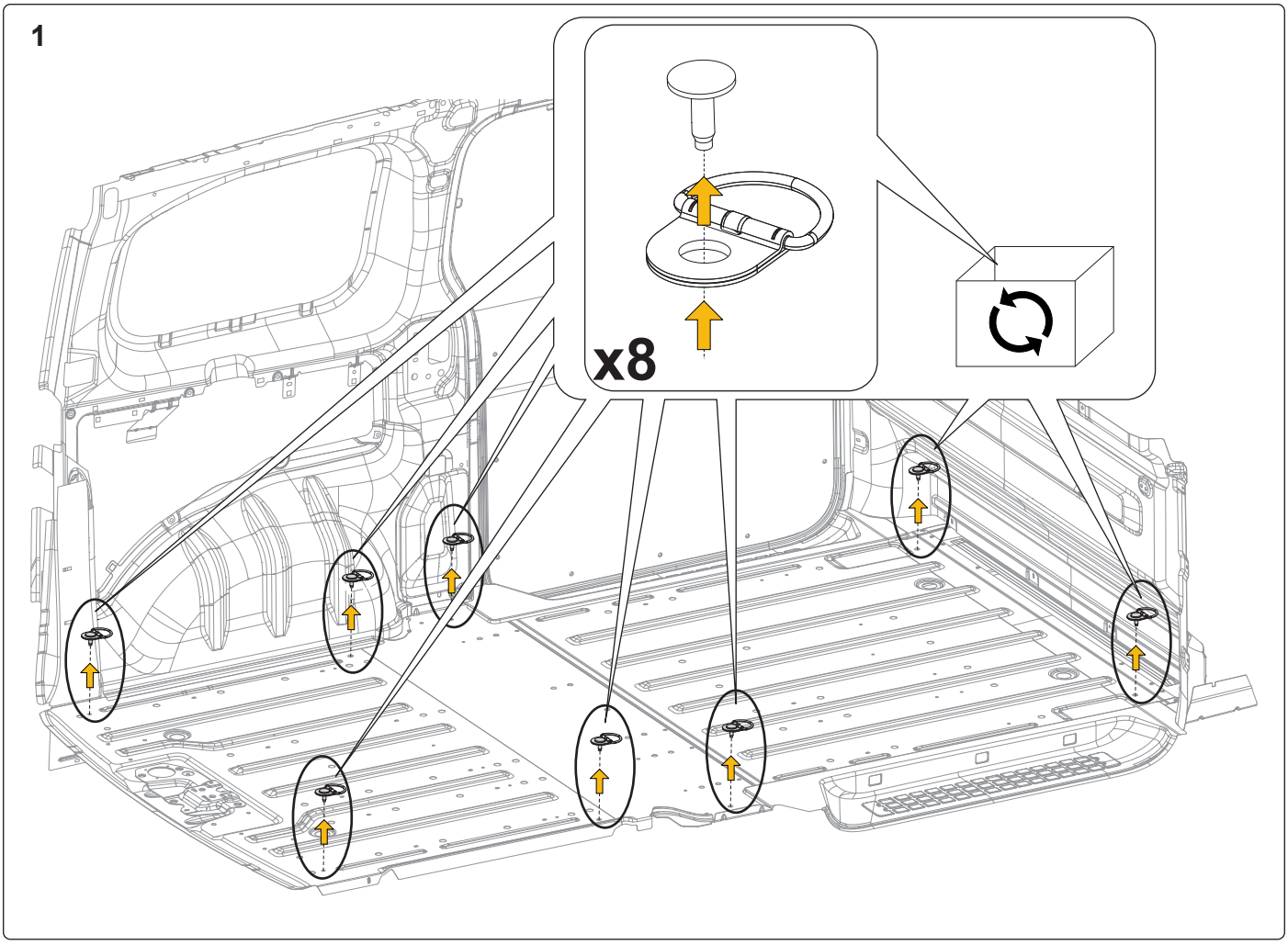

2

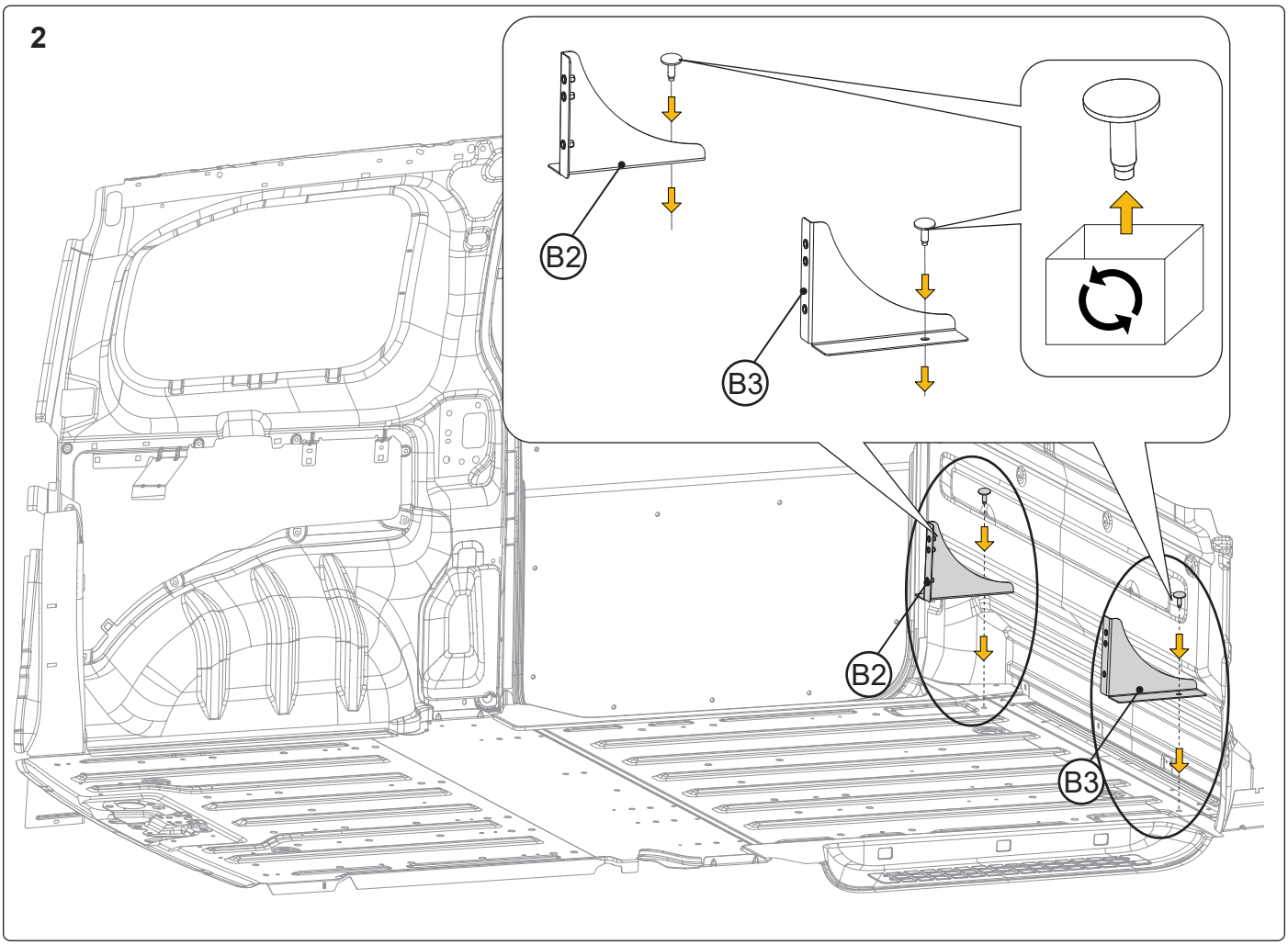

3

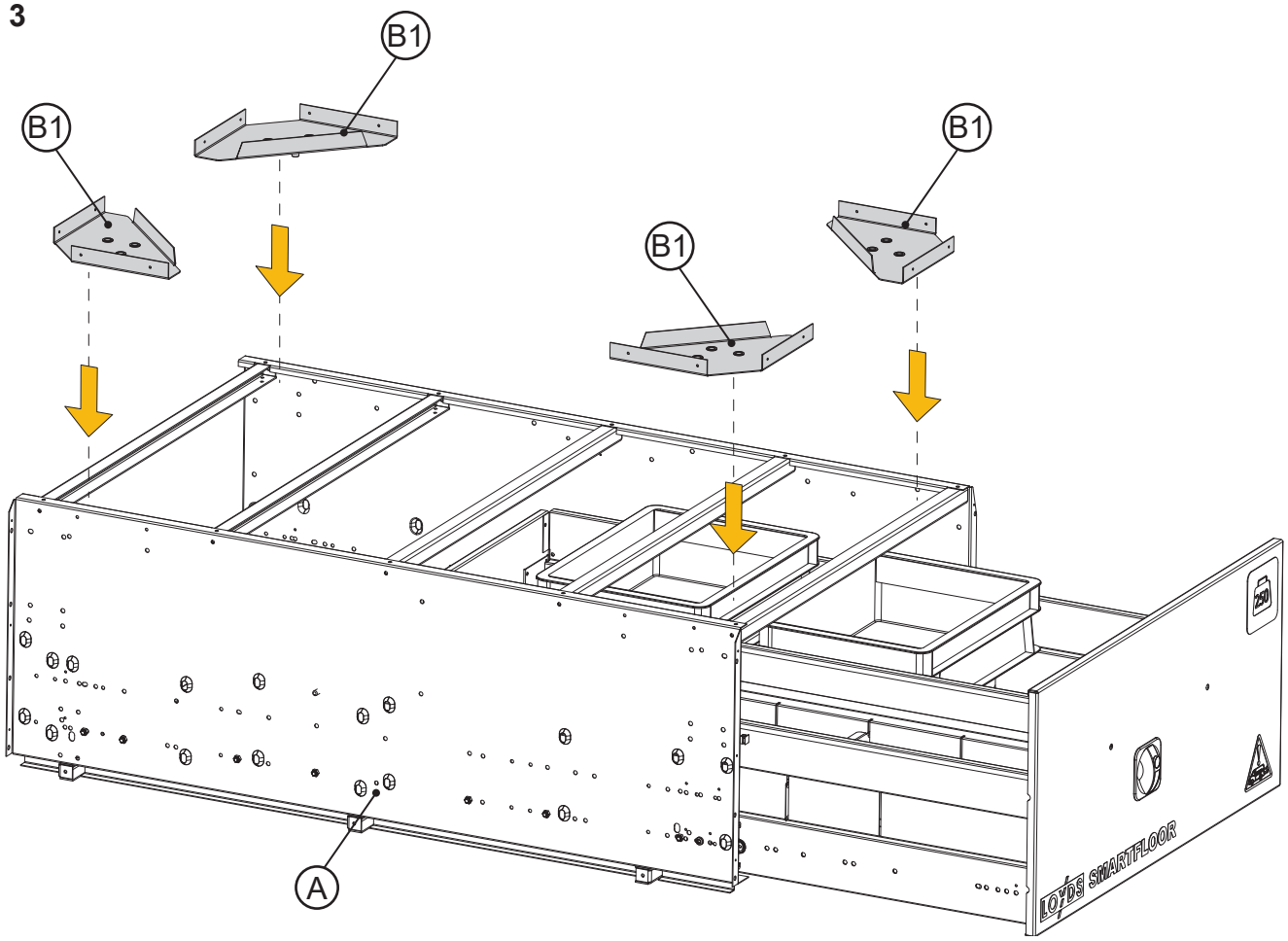
B1
B1
B1
B1
A
LOYDS SMARTFLOOR
250

4

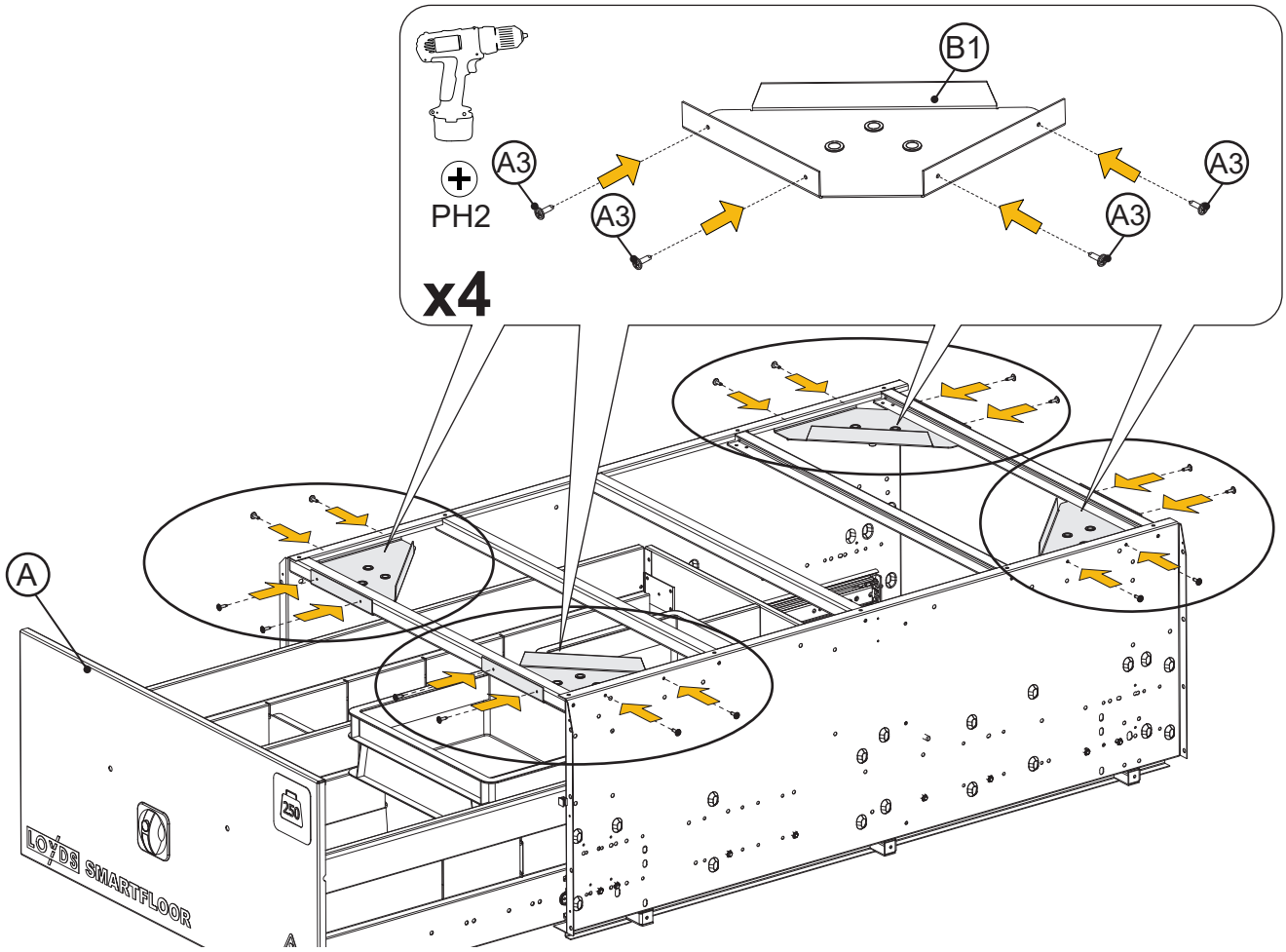
B1
A3
A3
A3
A3
PH2
x4
A
LOYDS SMARTFLOOR
250

5

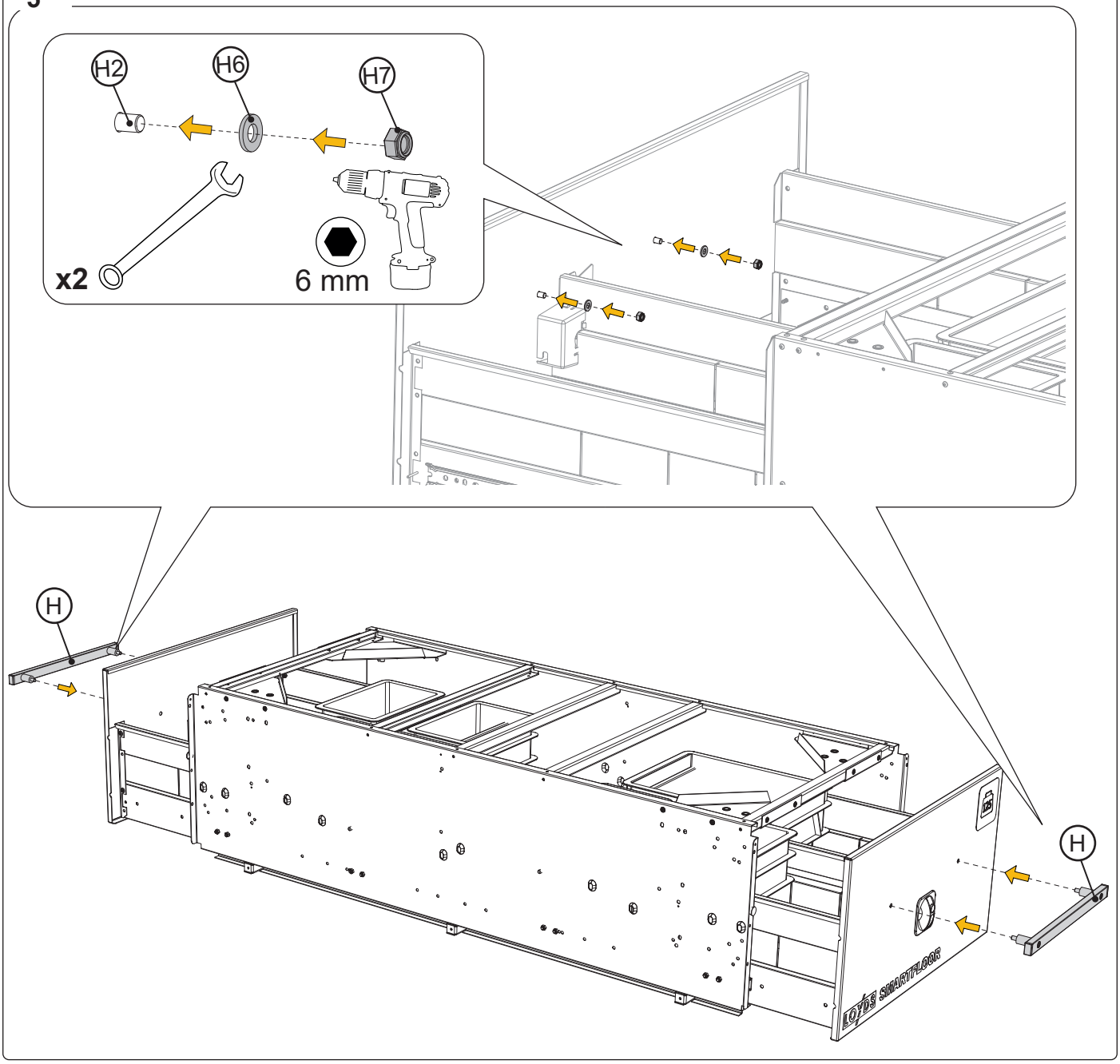

6

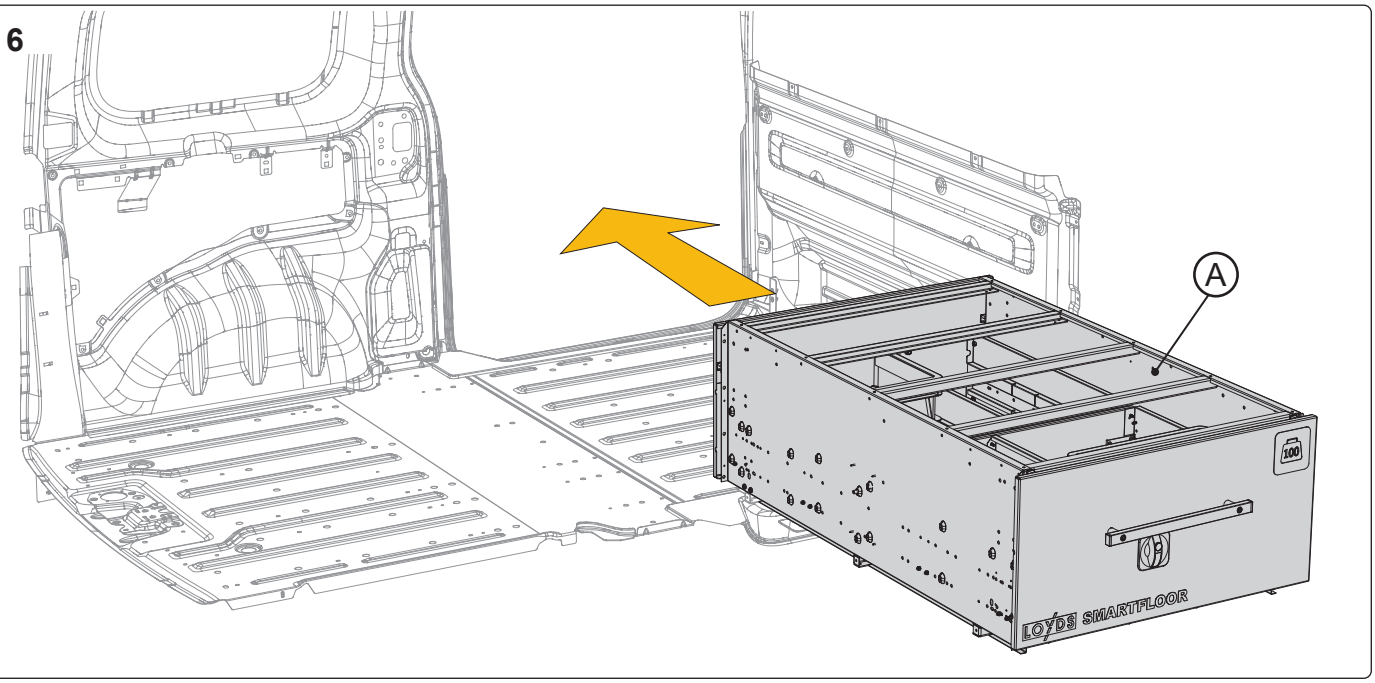

7

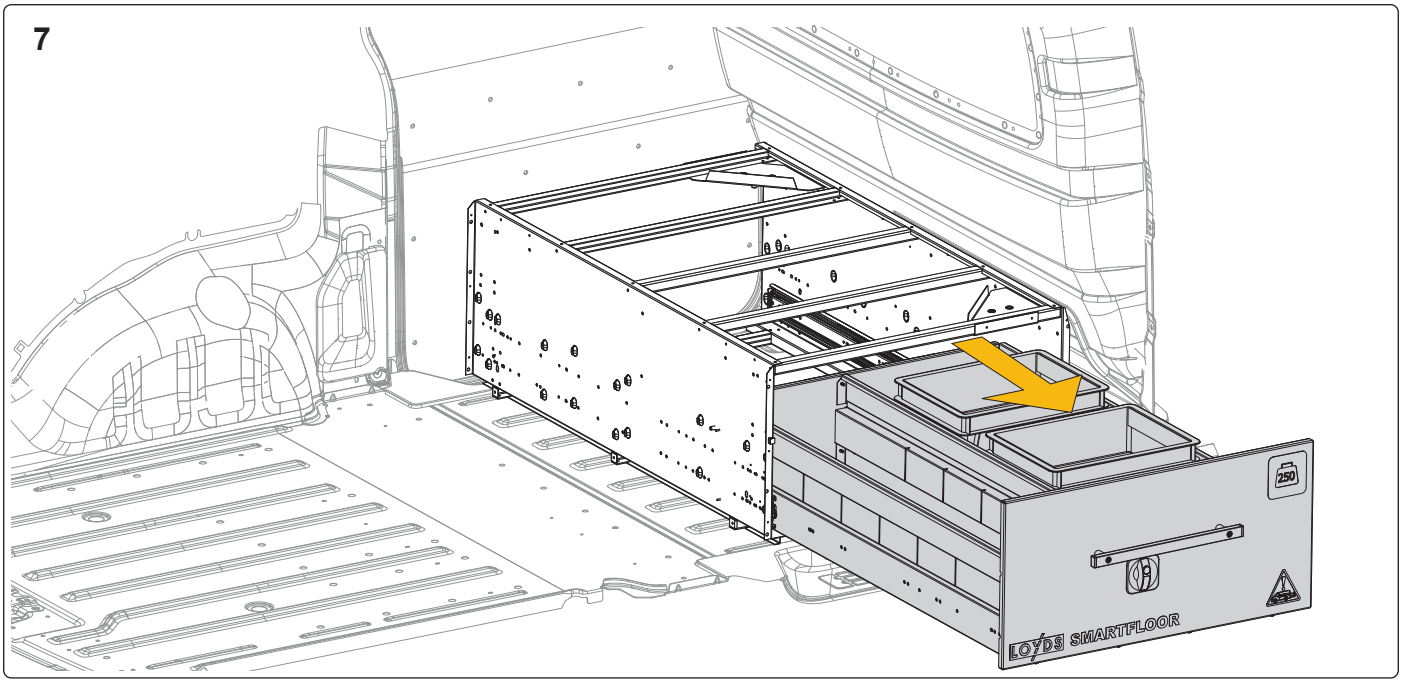

8

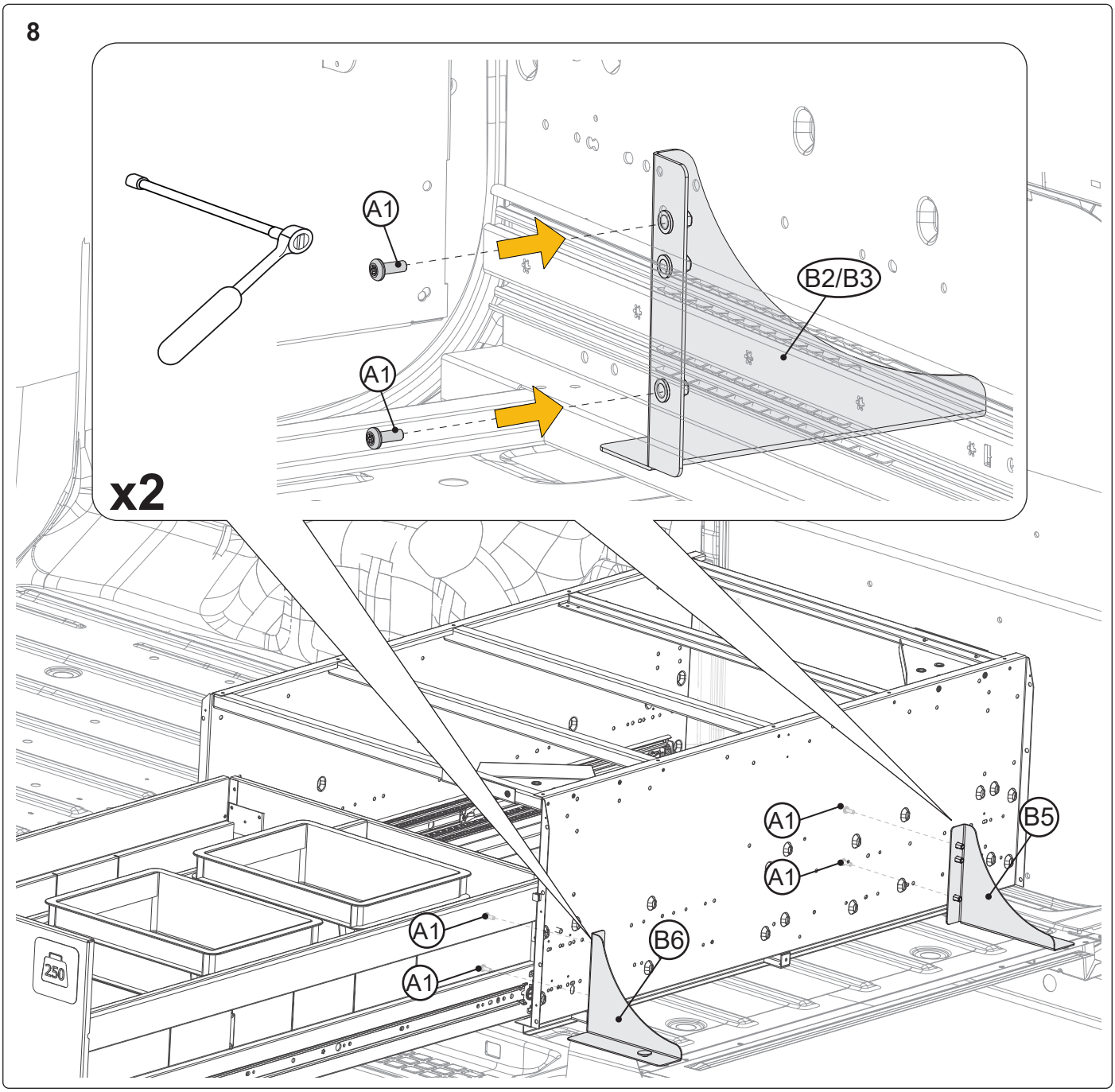

9

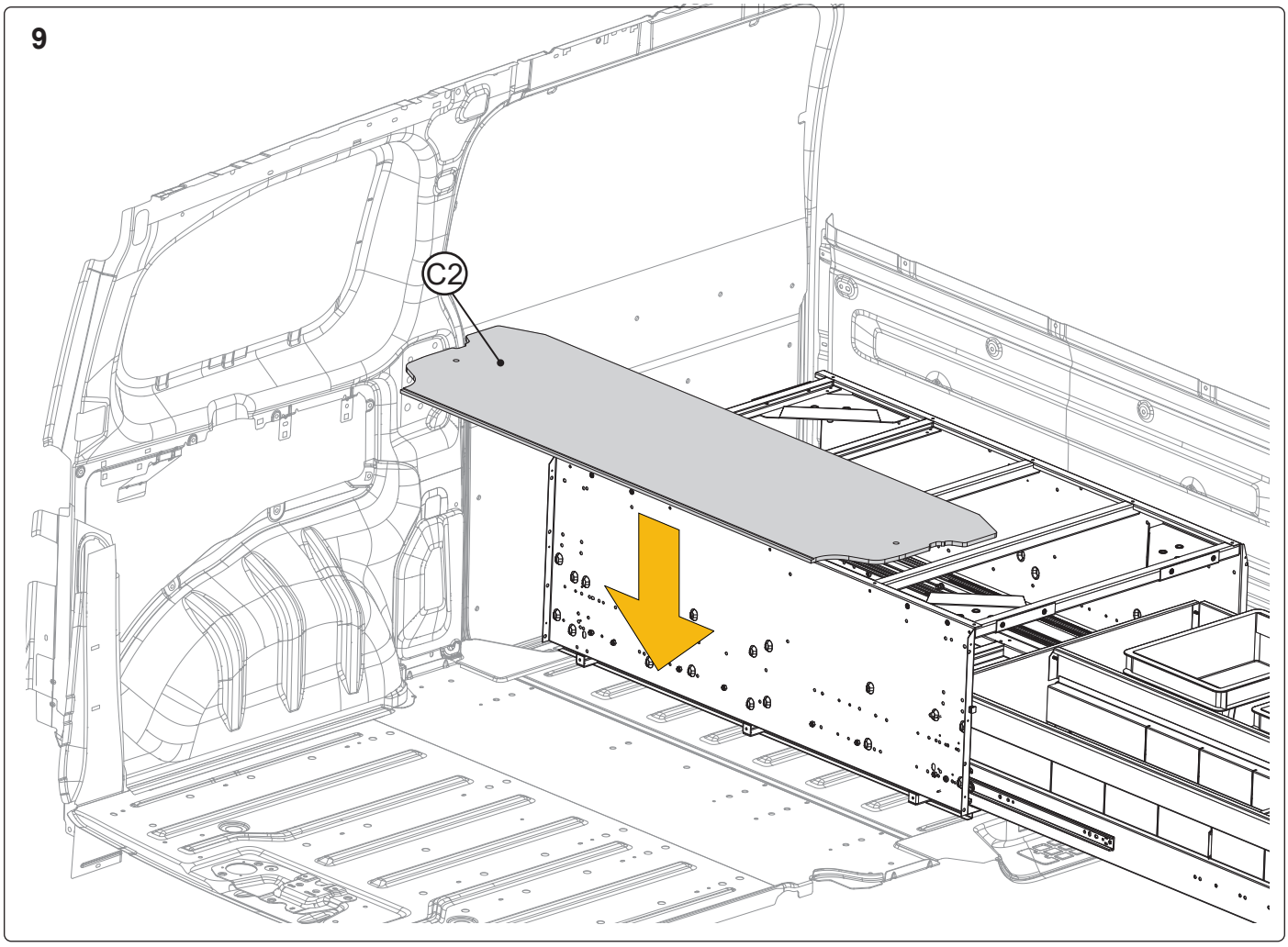

10

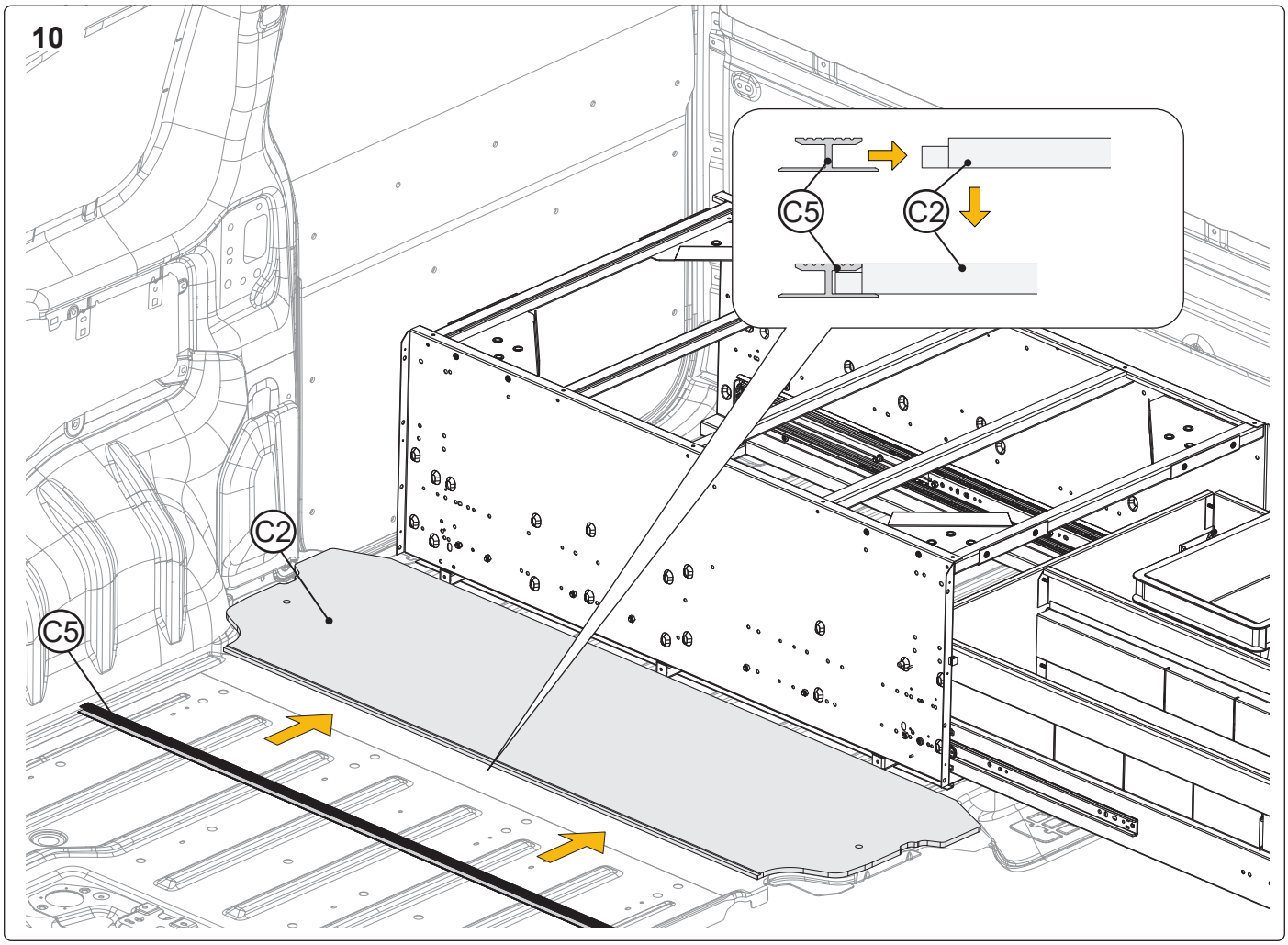

11

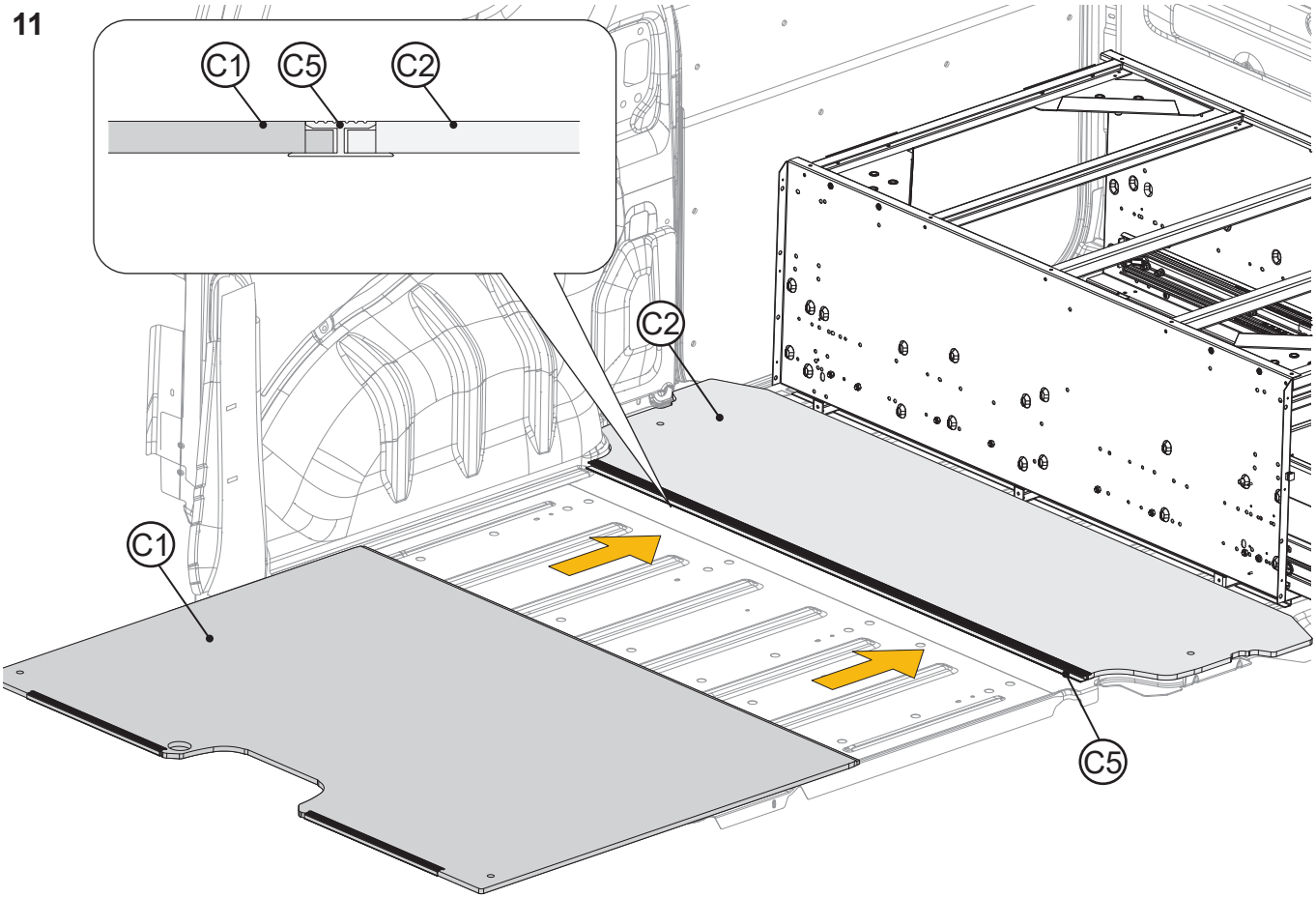

12

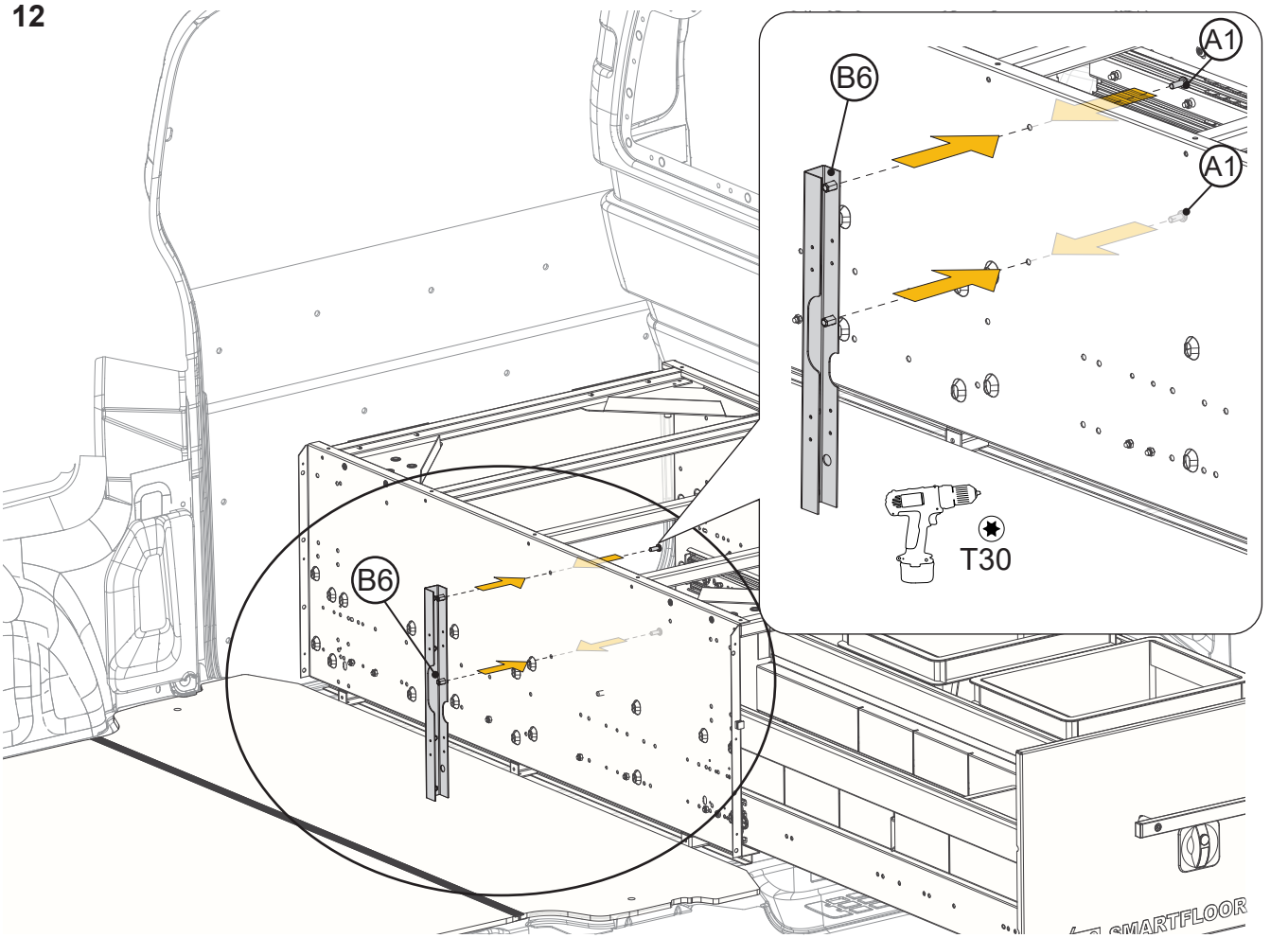

13

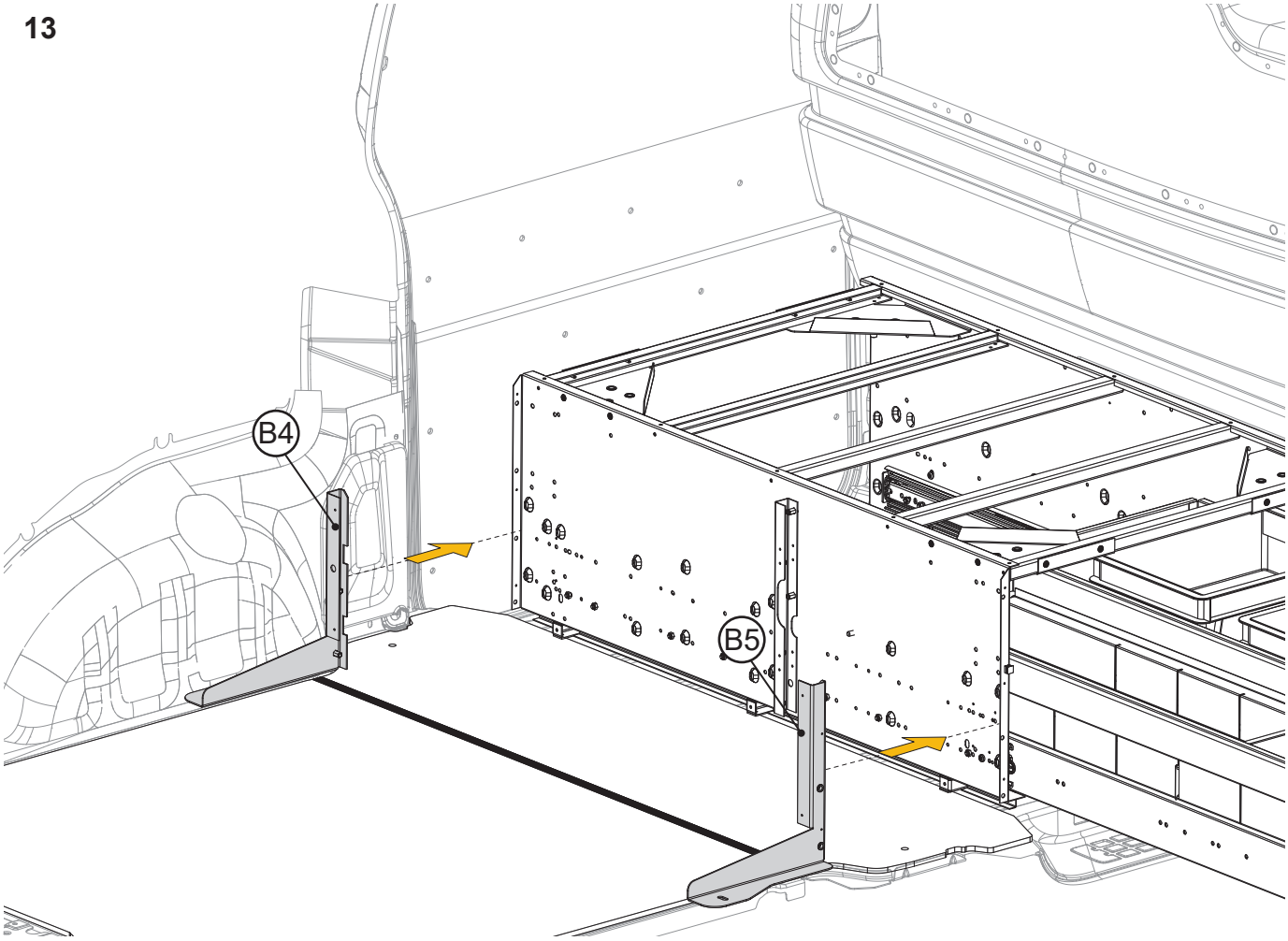

14

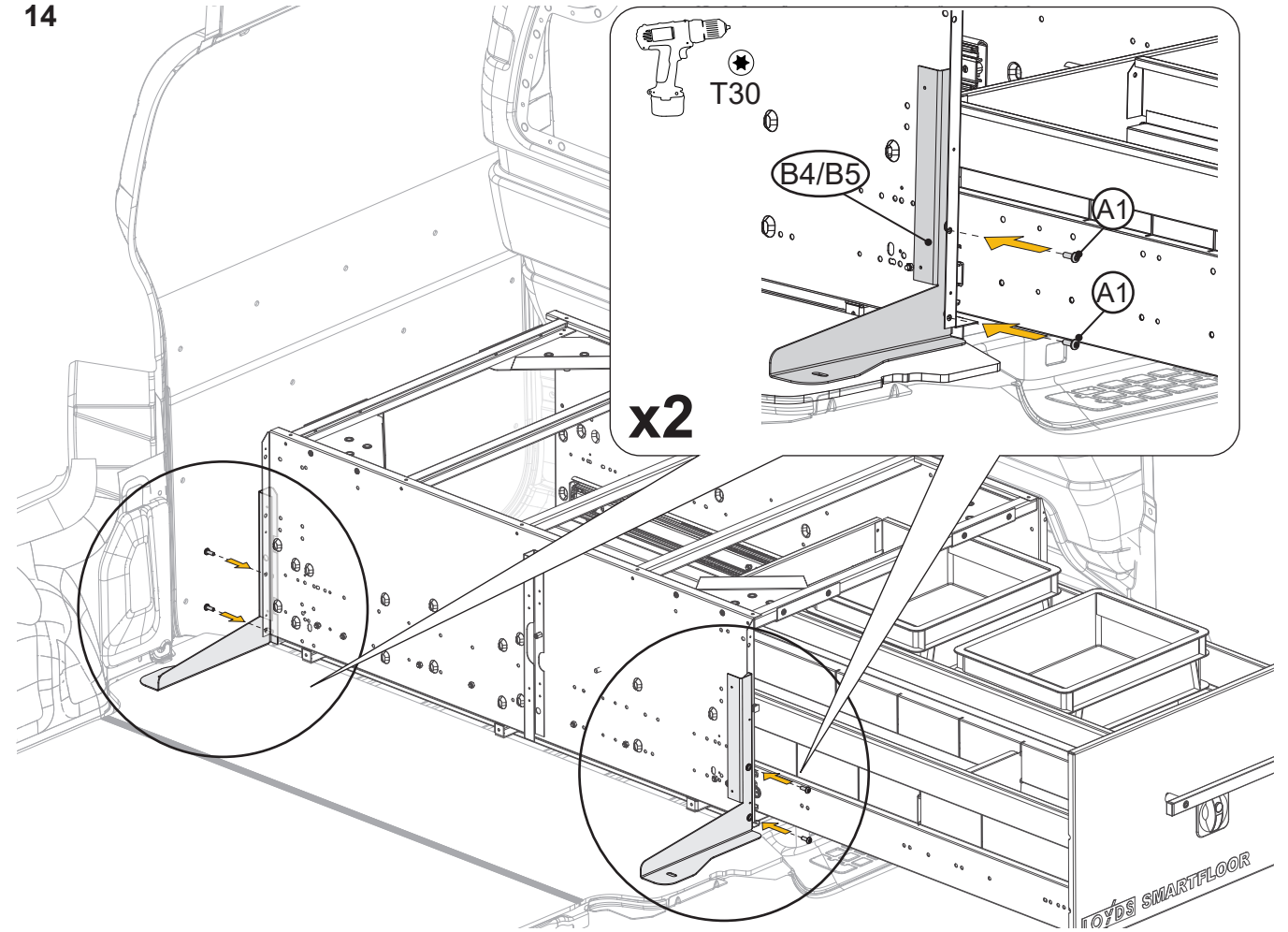

15

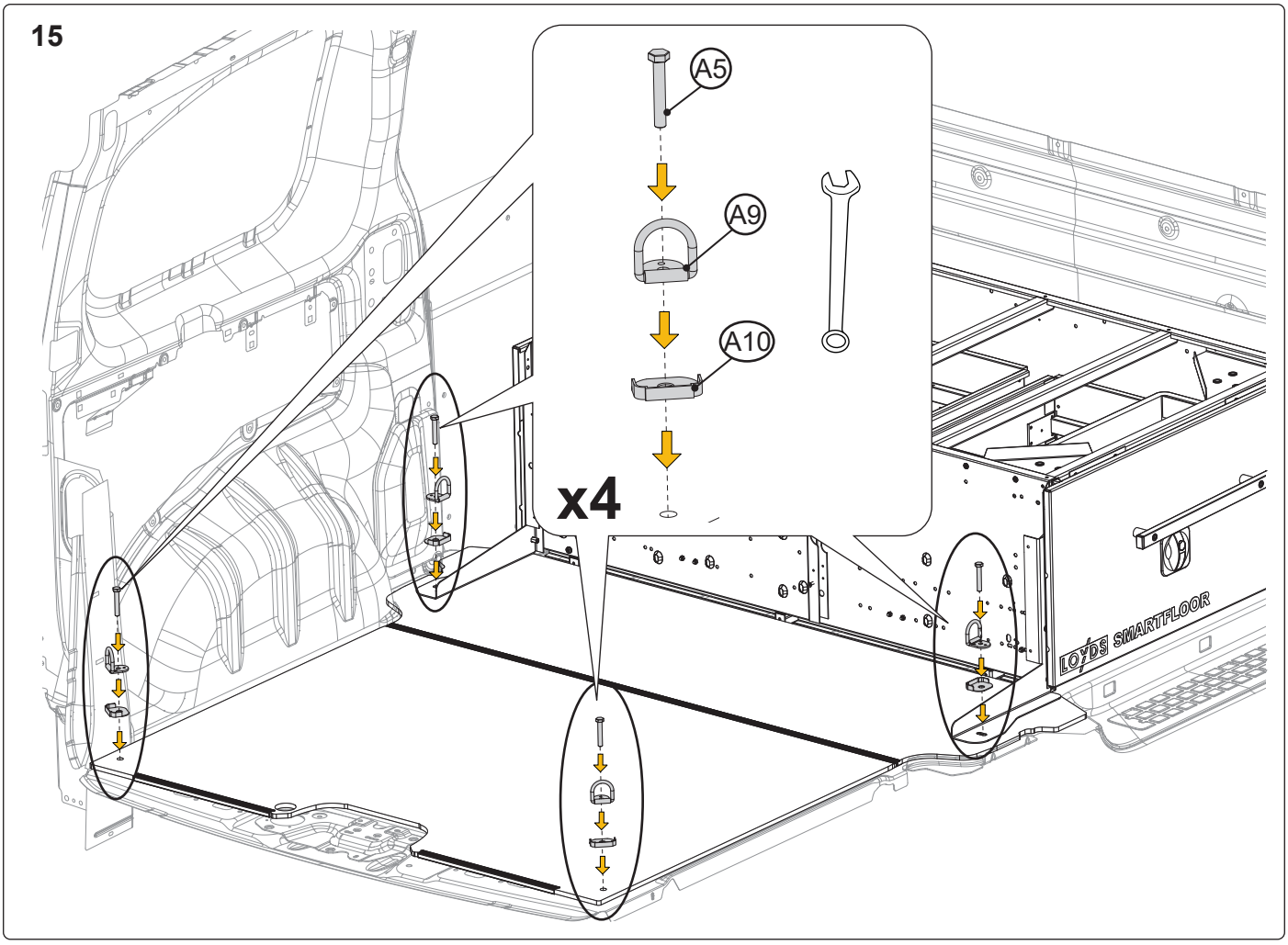

16

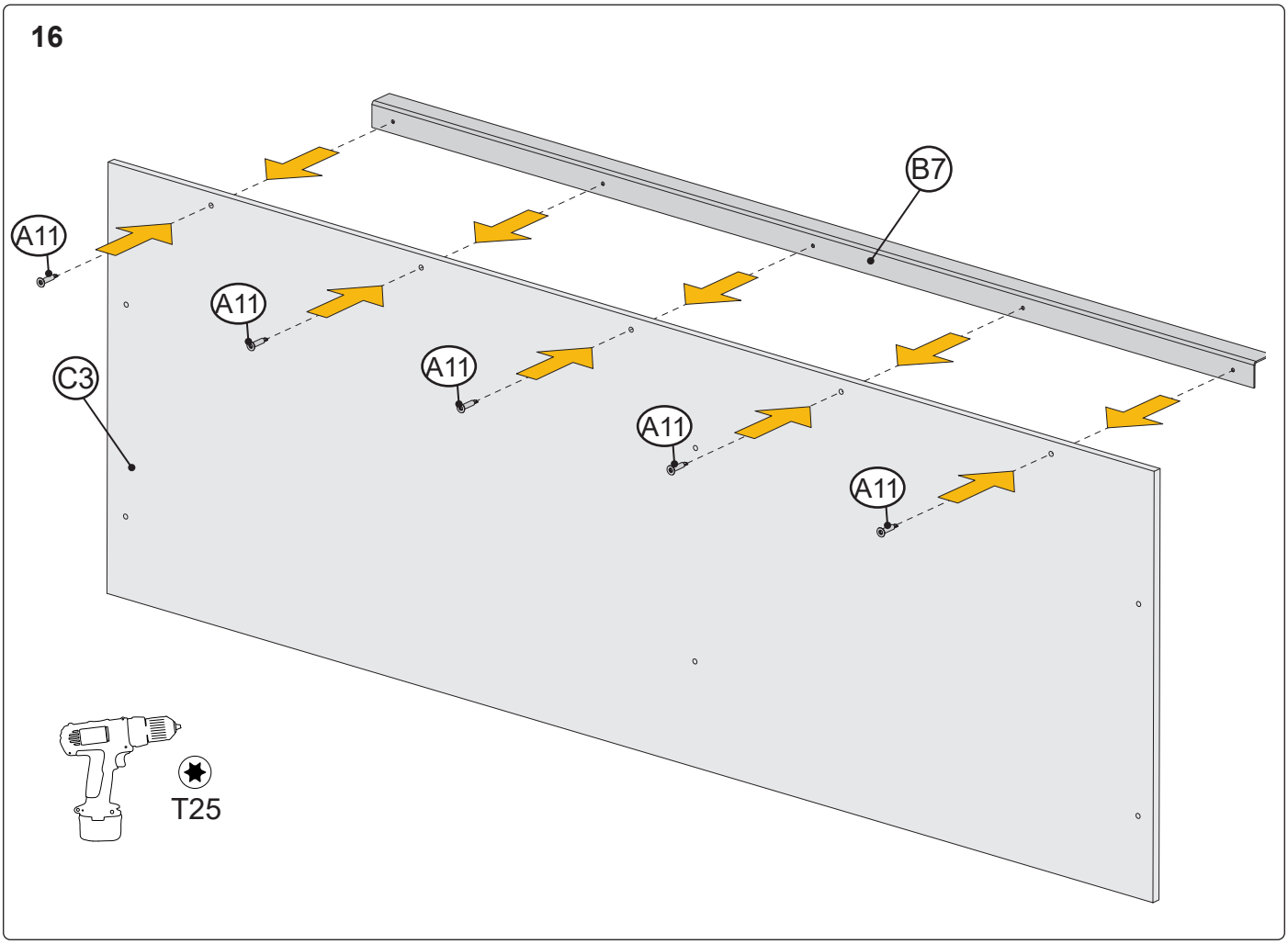

17

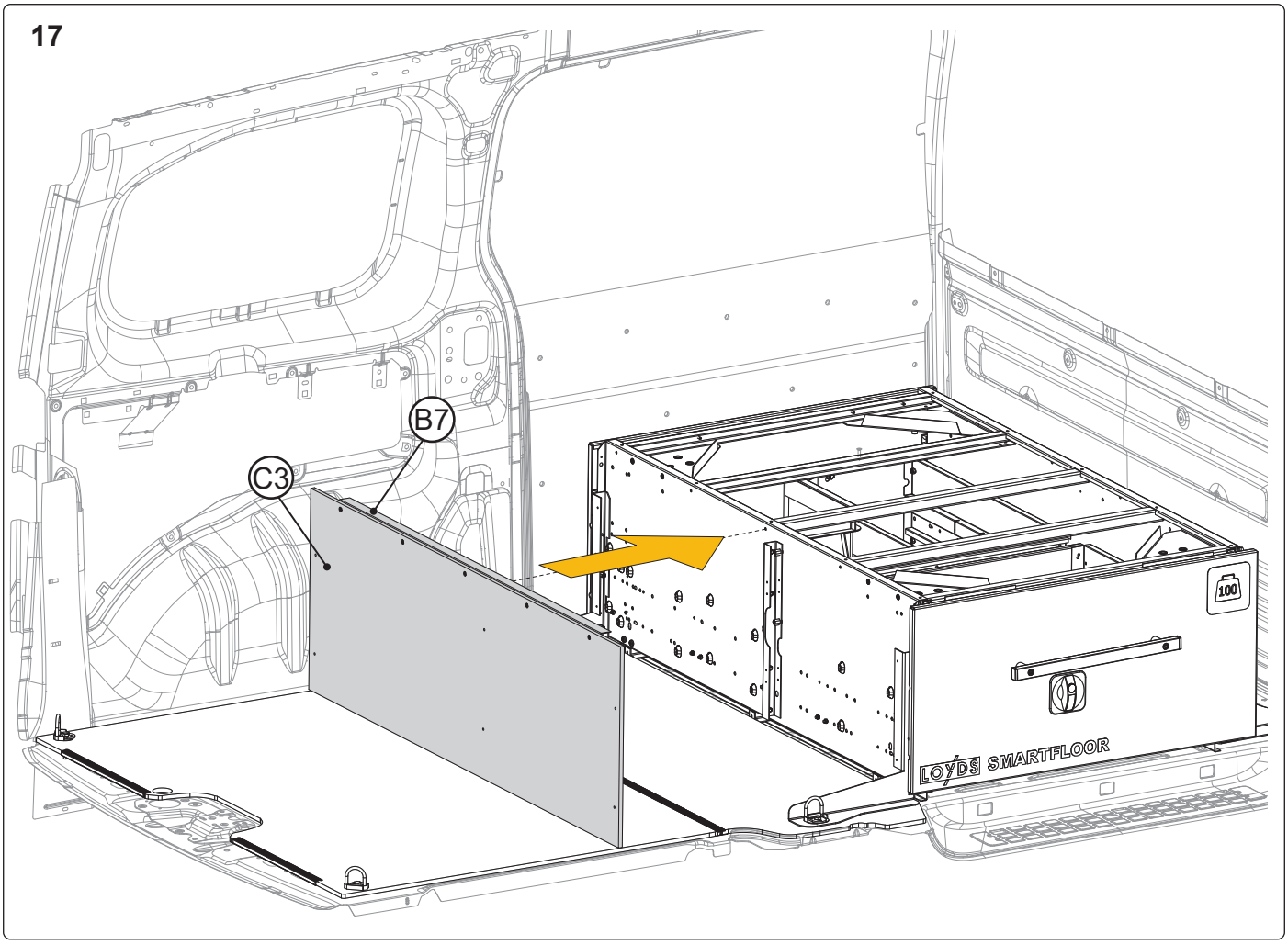

18

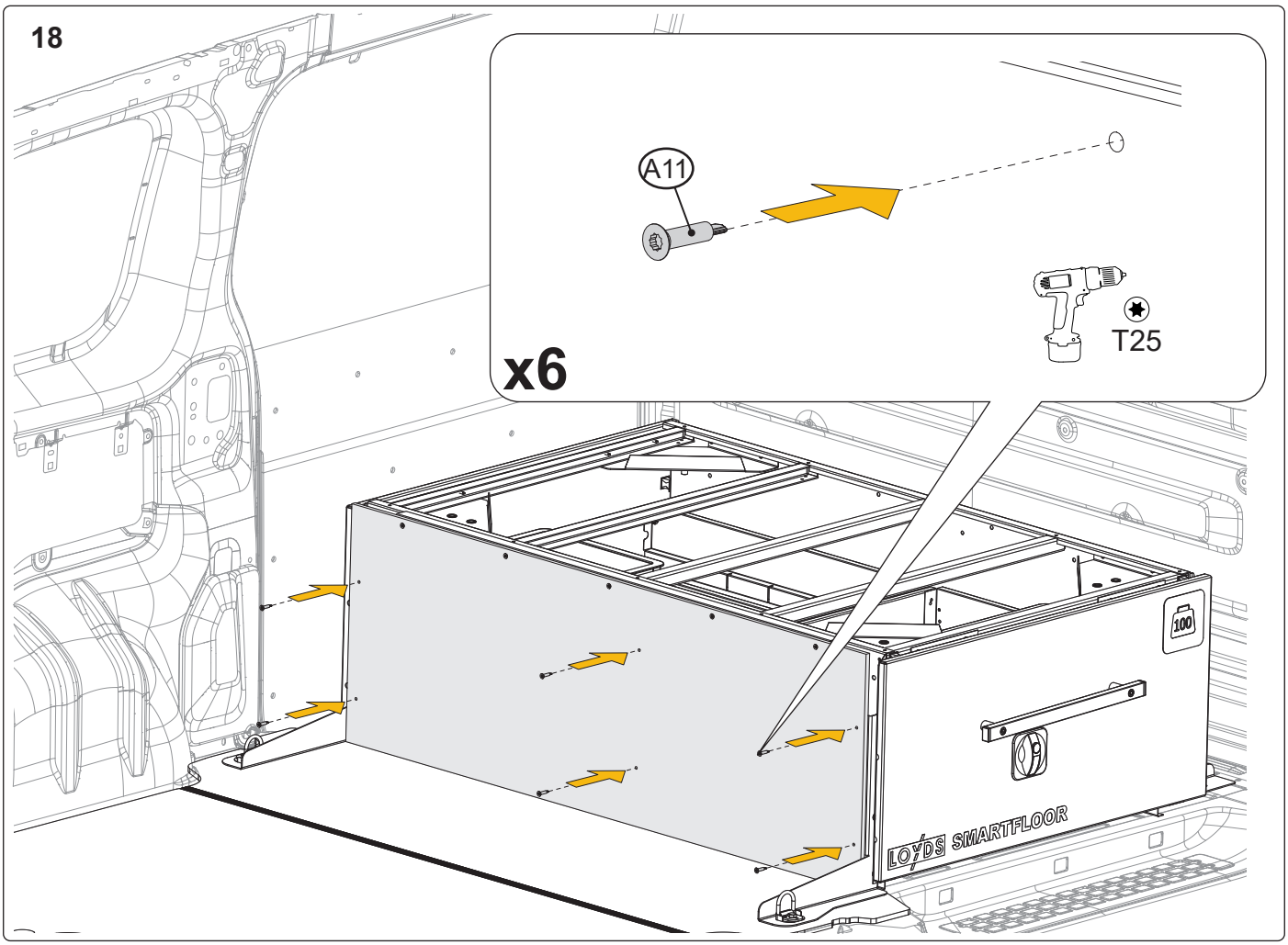

19

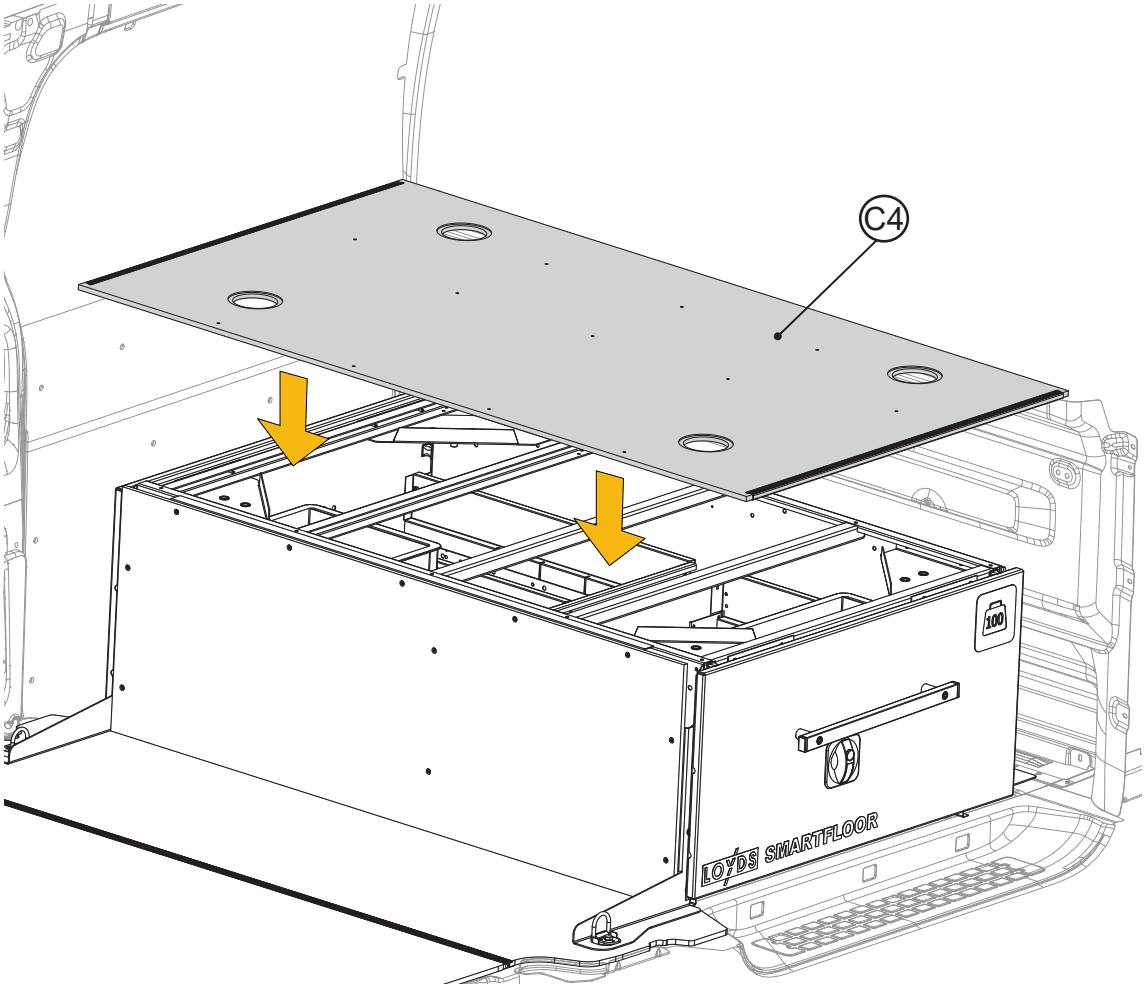
C4
100
LOYDS SMARTFLOOR

20

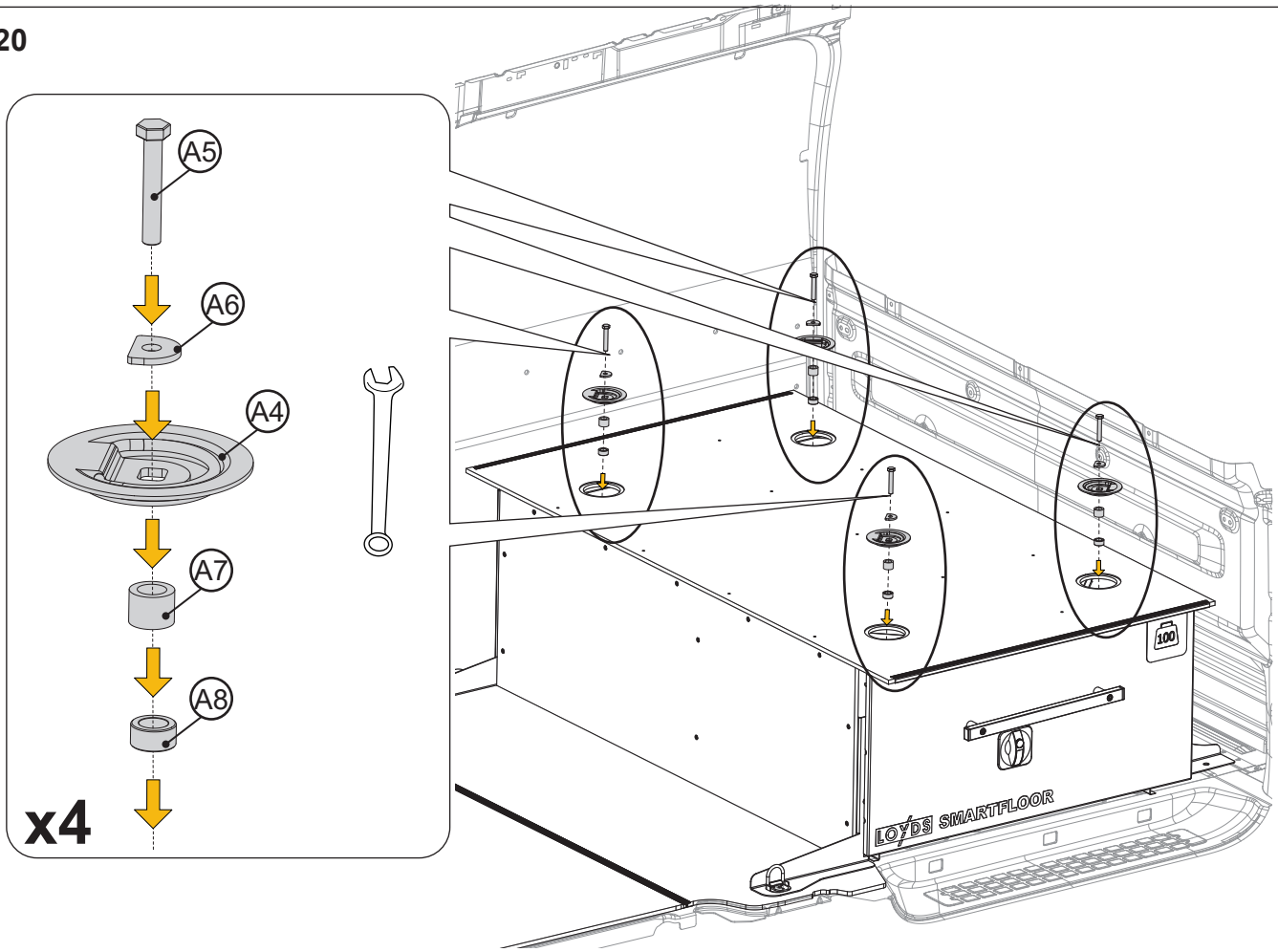
A5
A6
A4
A7
A8
x4
100
LOYDS SMARTFLOOR

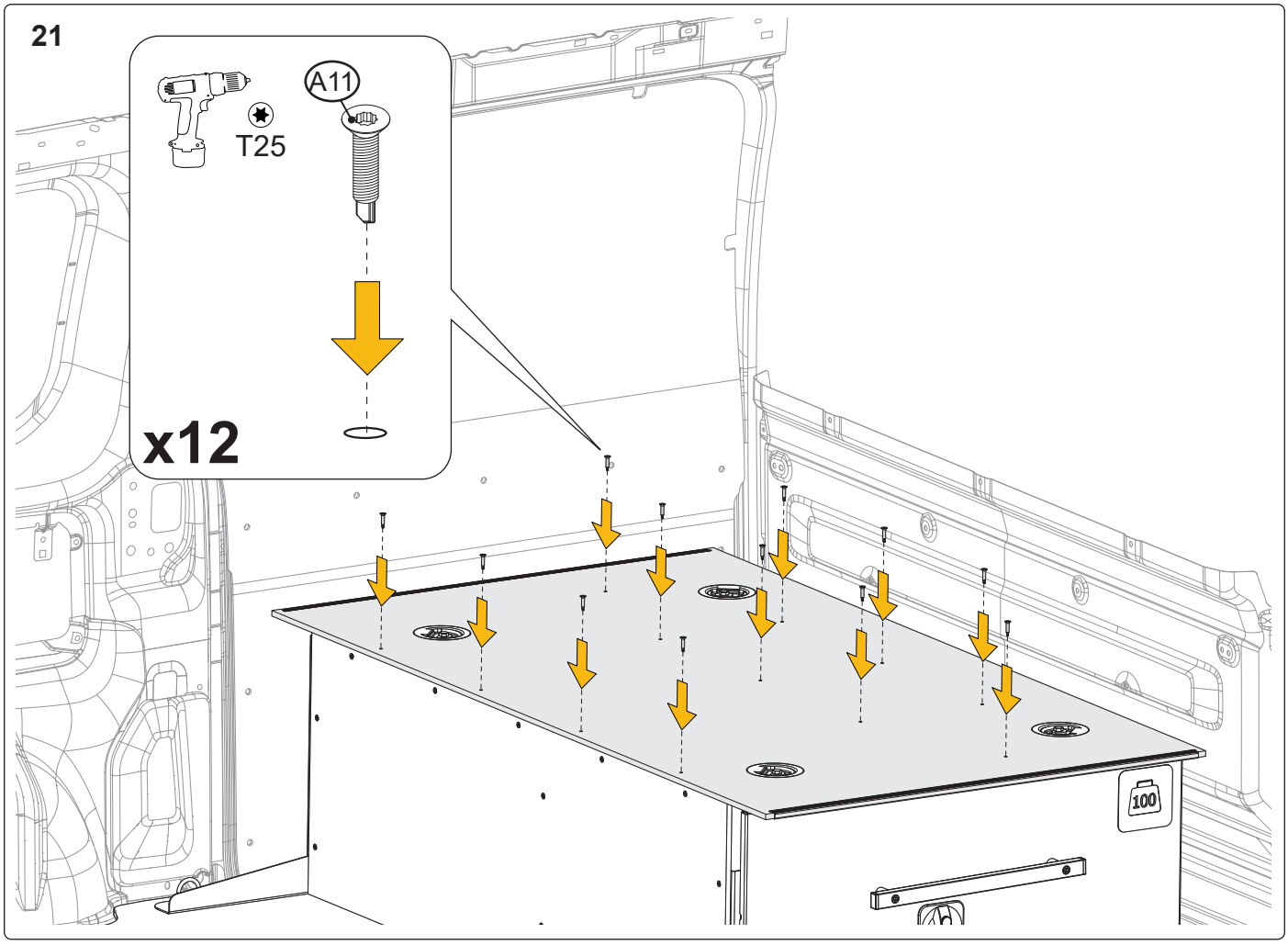
21
A11
T25
x12
100

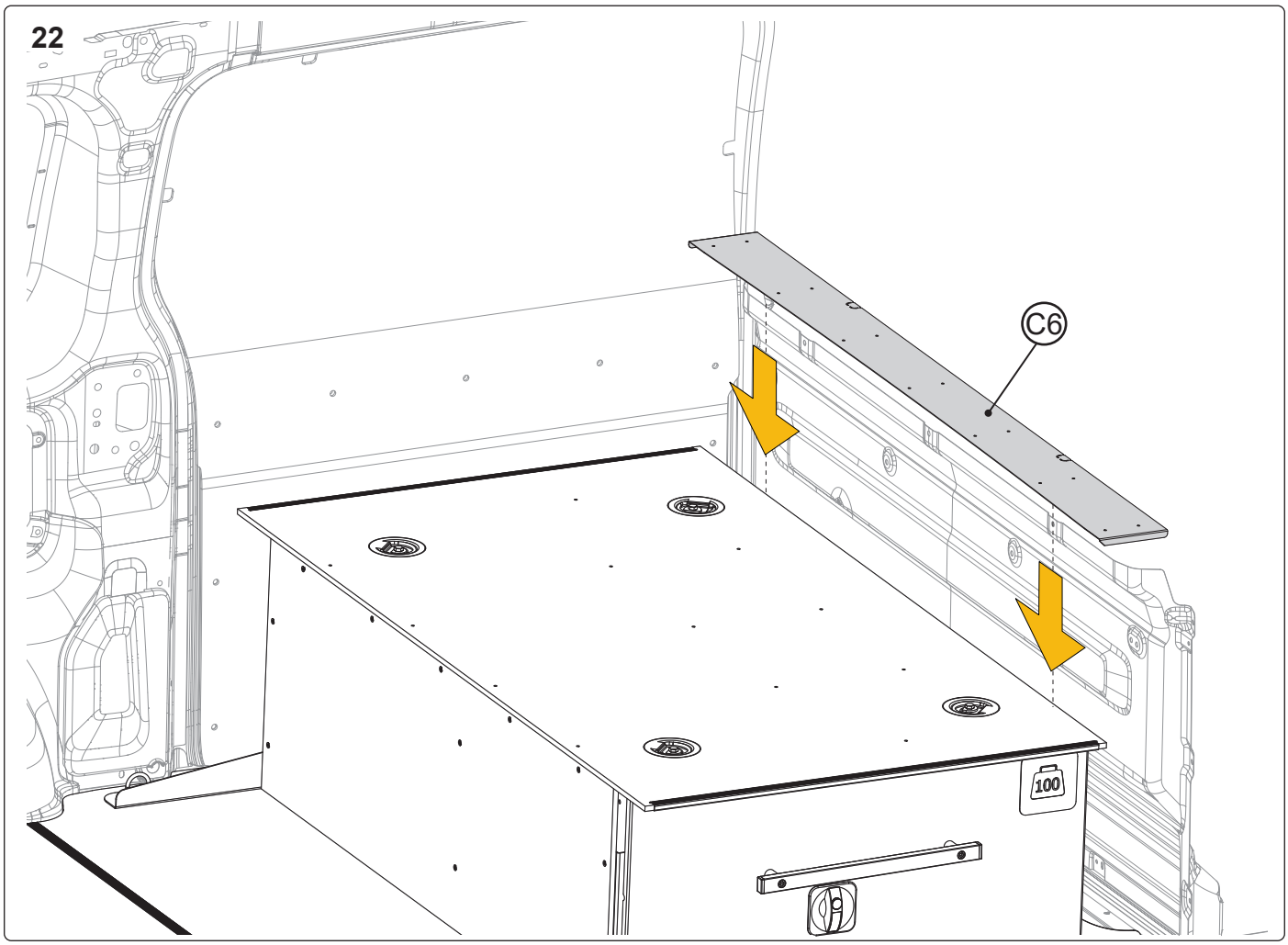
22
C6
100

23

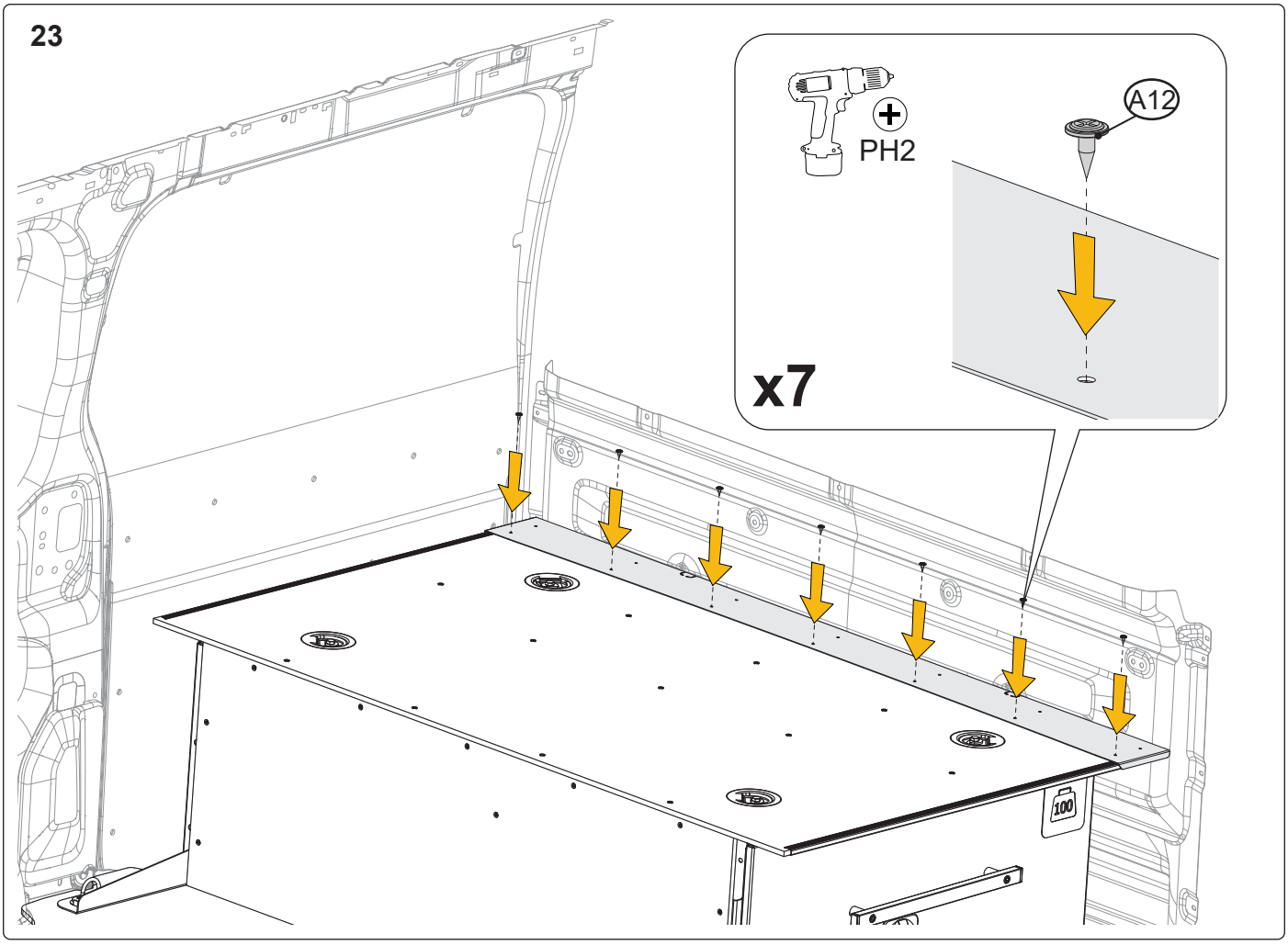

24

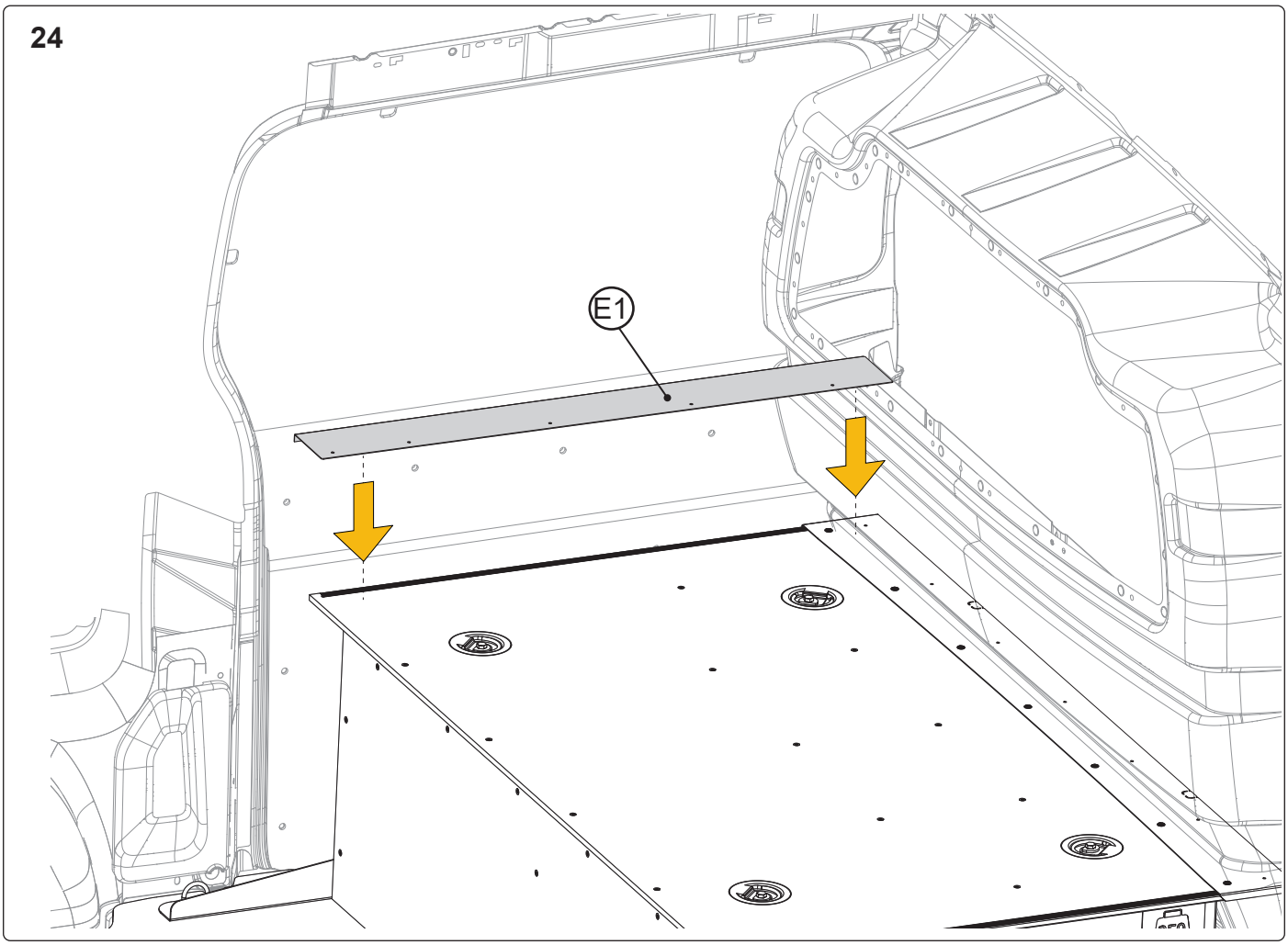

25

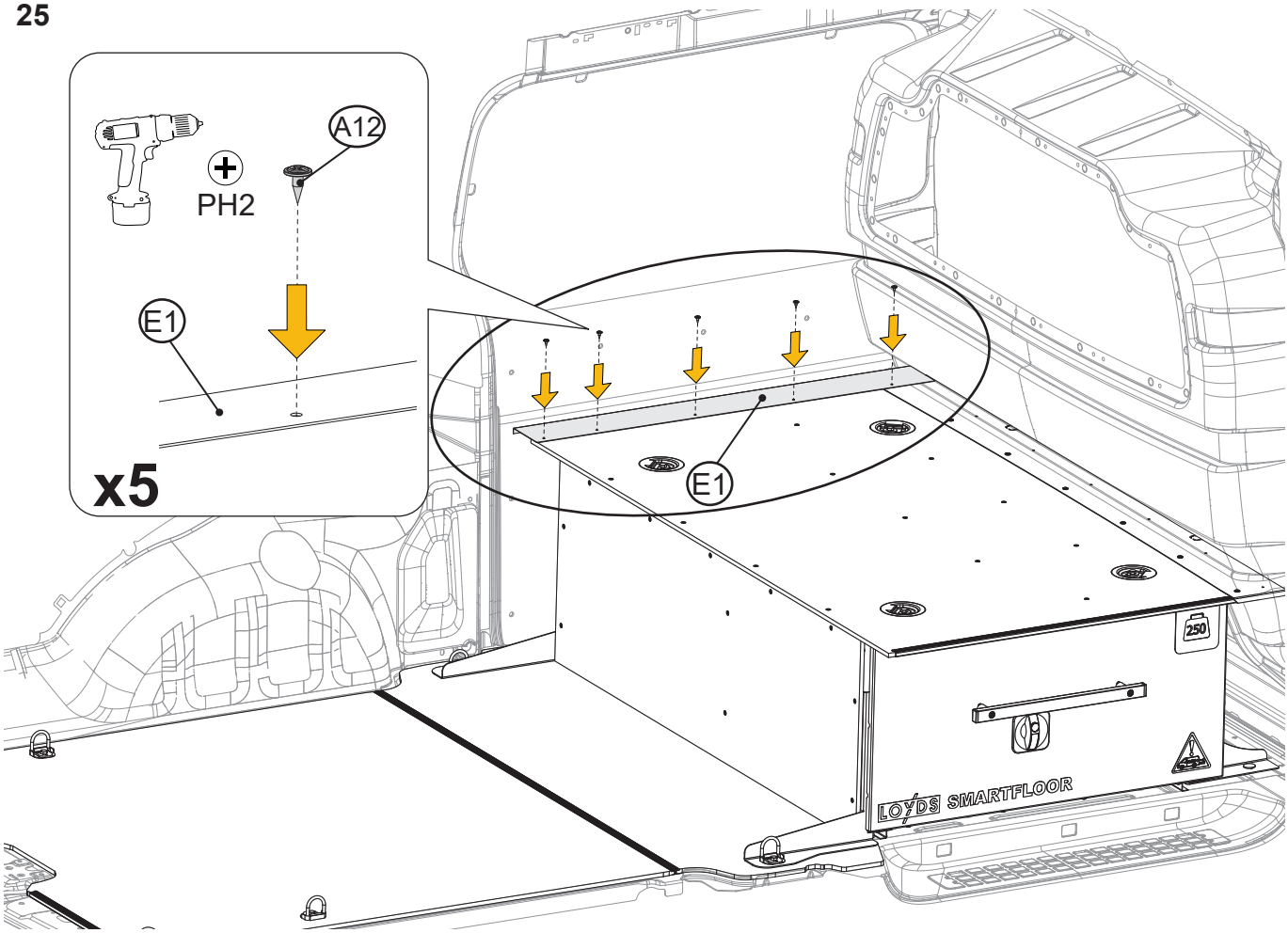

26

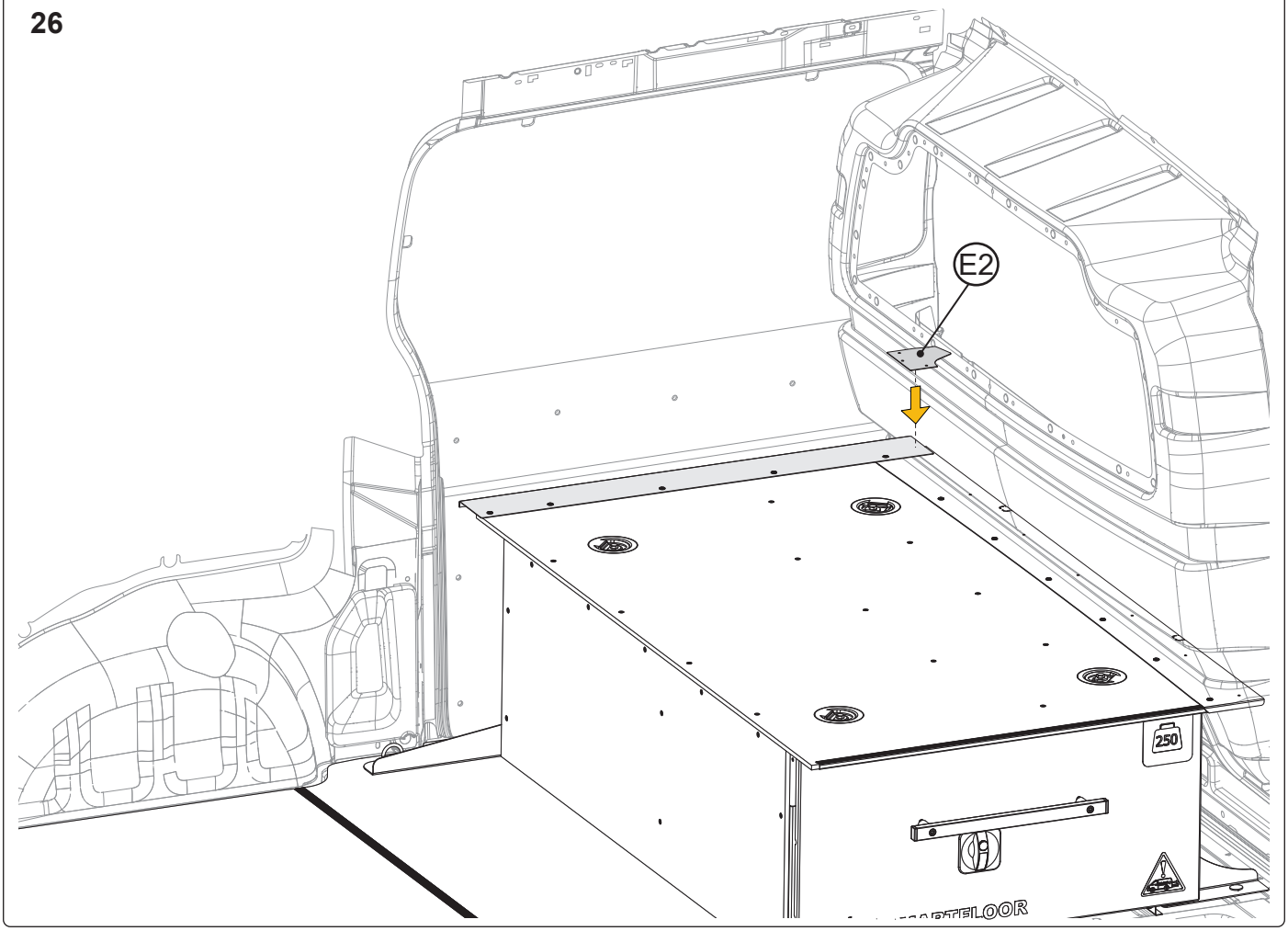

27

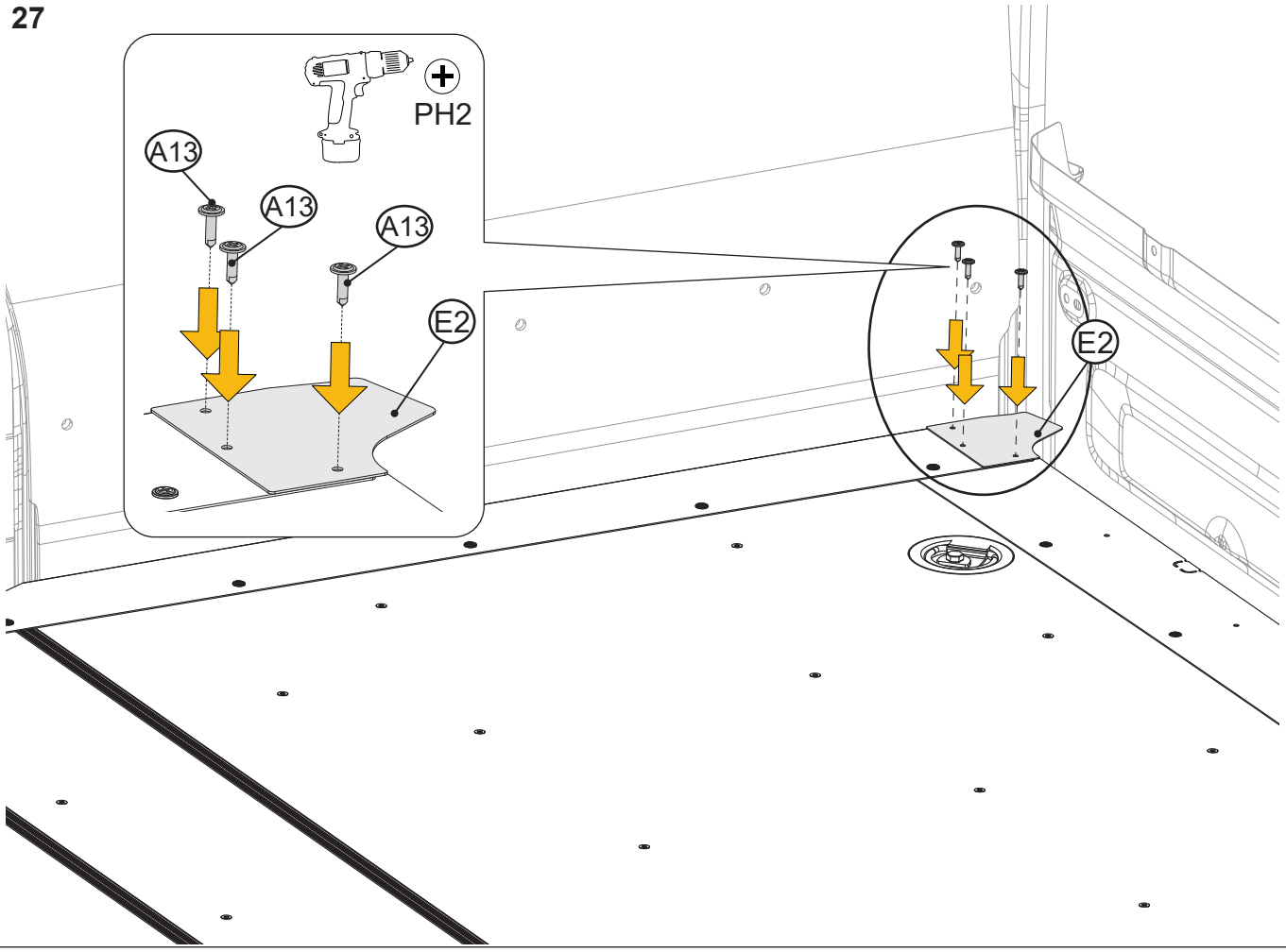
PH2
A13
A13
A13
E2
E2

28

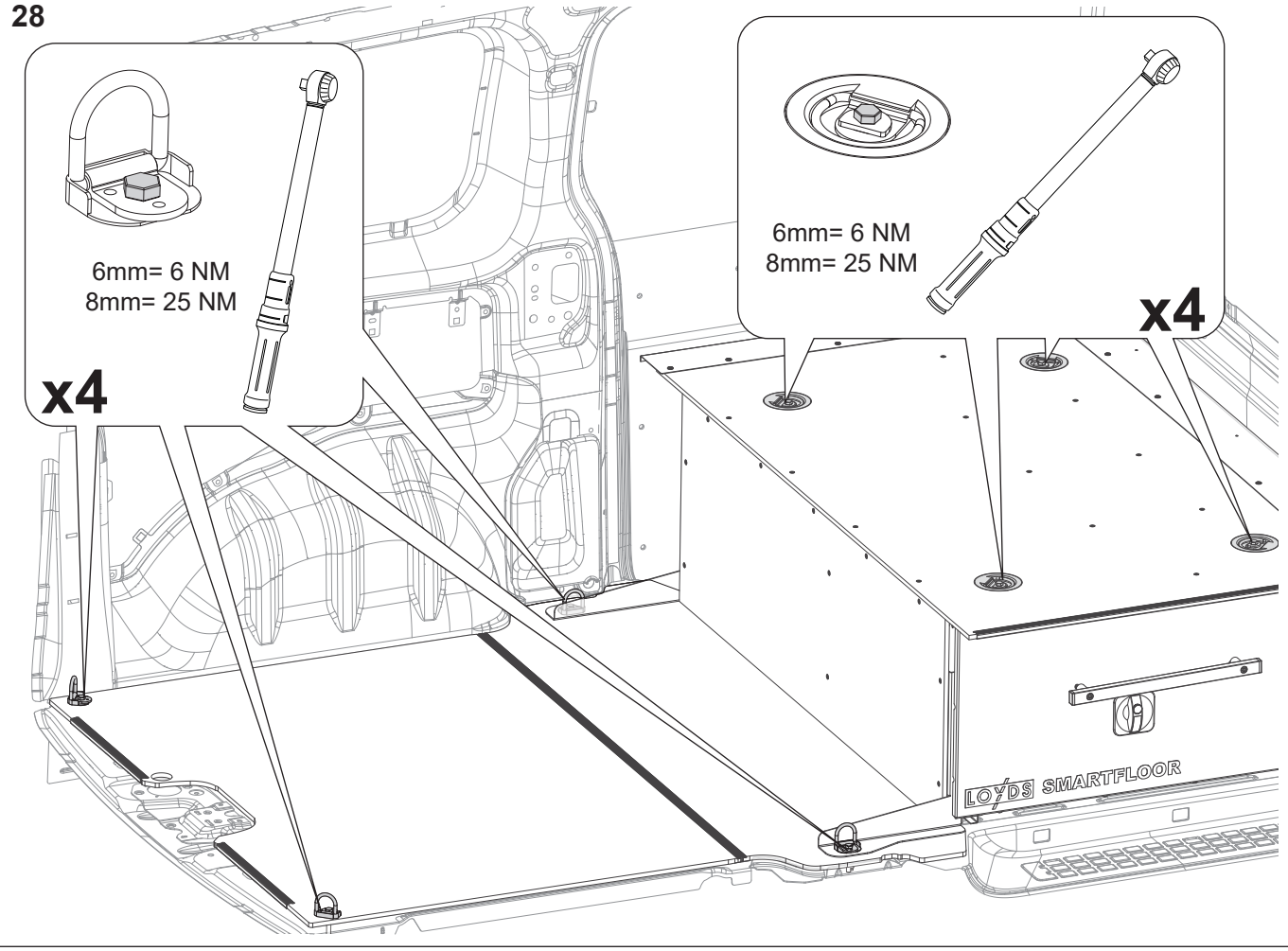
6mm= 6 NM
8mm= 25 NM
x4
6mm= 6 NM
8mm= 25 NM
x4
LOYDS SMARTFLOOR