Proace, Expert, Jumpy, Scudo, Vivaro

# Smartfloor Kit Complete Long L2 L3 1SLD

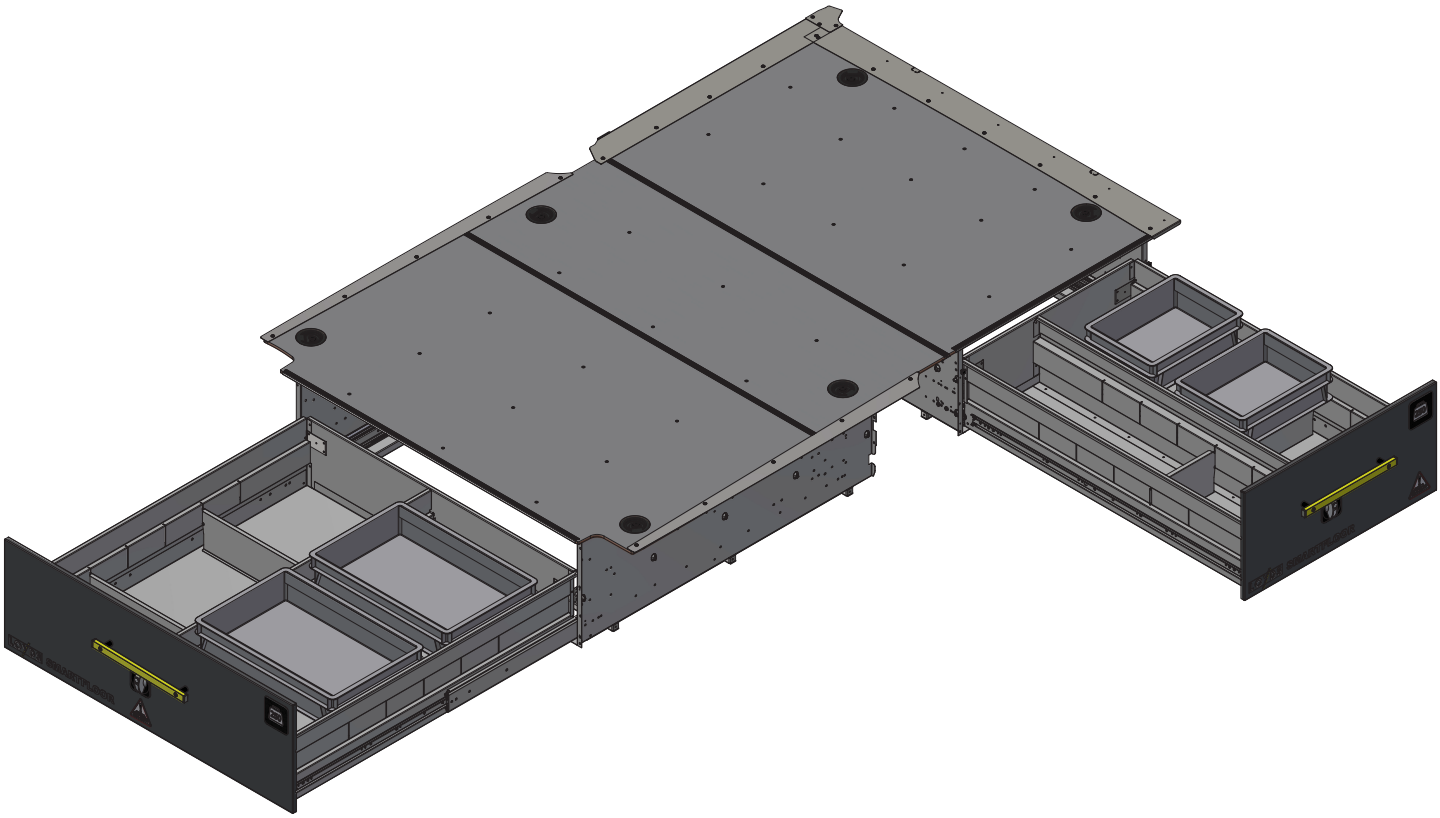

Installation Manual 15028921_B

Loyds Industri AS - 2026-02-09

LOYDS

## Revision Record

| Rev nr | Date | Page | Picture | Update | New | Deleted steps |
|---|---|---|---|---|---|---|
| A | 2025-11-11 | | | | X | |
| B | 2026-02-09 | 2 | | Added compatible cars | | |
| | | | | | | |
| | | | | | | |

## Compatible cars

Toyota Proace from 2016
Peugeot Expert from 2016
Citroën Jumpy from 2016
Opel Vivaro from 2019
Fiat Scudo from 2024

Use colors when printing this installation manual. / Ved utskrift, bruk farger.

## Tools

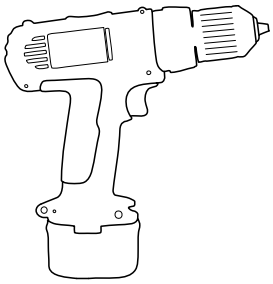

T25
T30

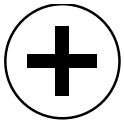

PH2

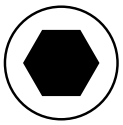

6 mm

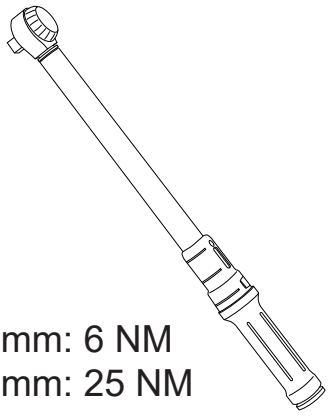

6 mm: 6 NM
8 mm: 25 NM

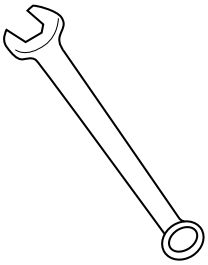

13 mm

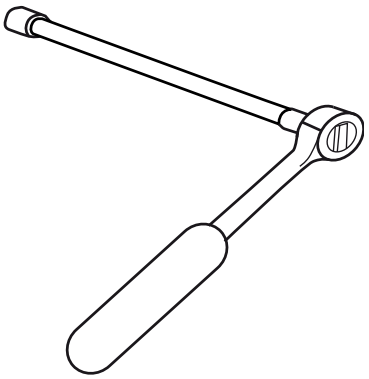

# 15024415 Kit Complete L2 L3 1SLD PEJ SF2020

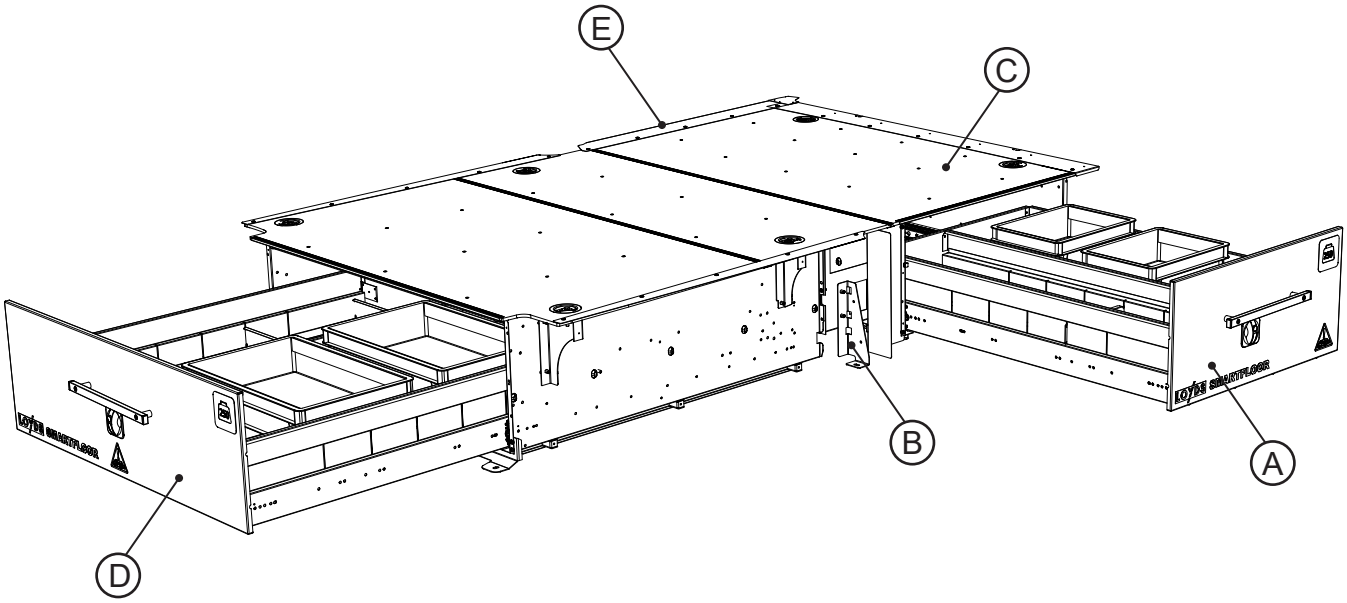


| Number | Quantity | Part Number | Definition |
|---|---|---|---|
| A | 1 | 15021294 | Front Drawer FD1 W770 L1200 Main ASSY |
| B | 1 | 15024412 | Steelbracket Set L2 L3 PEJ SF2020 |
| C | 1 | 15024413 | Floor Set L2 L3 PEJ SF2020 |
| D | 1 | 15022501 | Rear Drawer RD W1140 L1200 |
| E | 1 | 15018478 | Supplement Bracket Set 1SLD PEJ ASSY SE |

# 15024412 Steelbracket Set L2 L3 PEJ SF2020

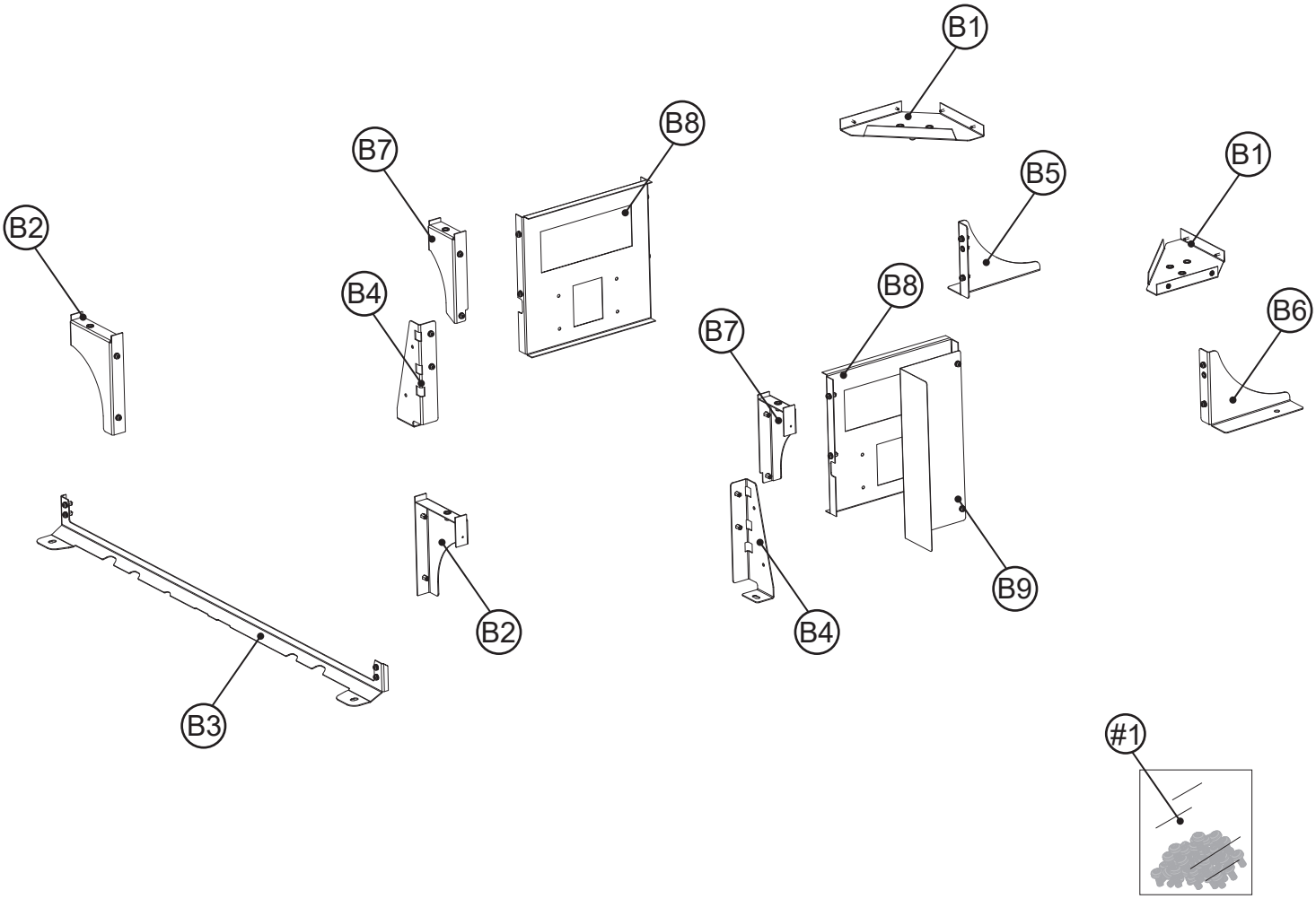


| Number | Quantity | Part Number | Definition |
|---|---|---|---|
| B1 | 2 | 15018460 | Bracket Latch Inner 8mm ASSY |
| B2 | 2 | 15018461 | Bracket Latchcup Side M8 SF 2020 ASSY |
| B3 | 1 | 15021212 | Bracket Lower Rear Middle PEJ2020 ASSY |
| B4 | 2 | 15021218 | Bracket Middle PEJ2020 ASSY |
| B5 | 1 | 15021216 | Bracket Front Left PEJ2020 ASSY |
| B6 | 1 | 15021215 | Bracket Front Right PEJ2020 ASSY |
| B7 | 2 | 15021233 | Bracket Latchcup Side M8 Narrow ASSY |
| B8 | 2 | 15024396 | Bracket Distance FD RD L2 L3 PEJ SF2020 ASSY |
| B9 | 1 | 15024410 | Cover Rear Slide Door PEJ SF2020 ASSY |
| #1 | 1 | 15024411 | Fitting Kit Steelbracket Set PEJ L3 SF2020 |

# 15024413 Floor Set L2 L3 PEJ SF2020

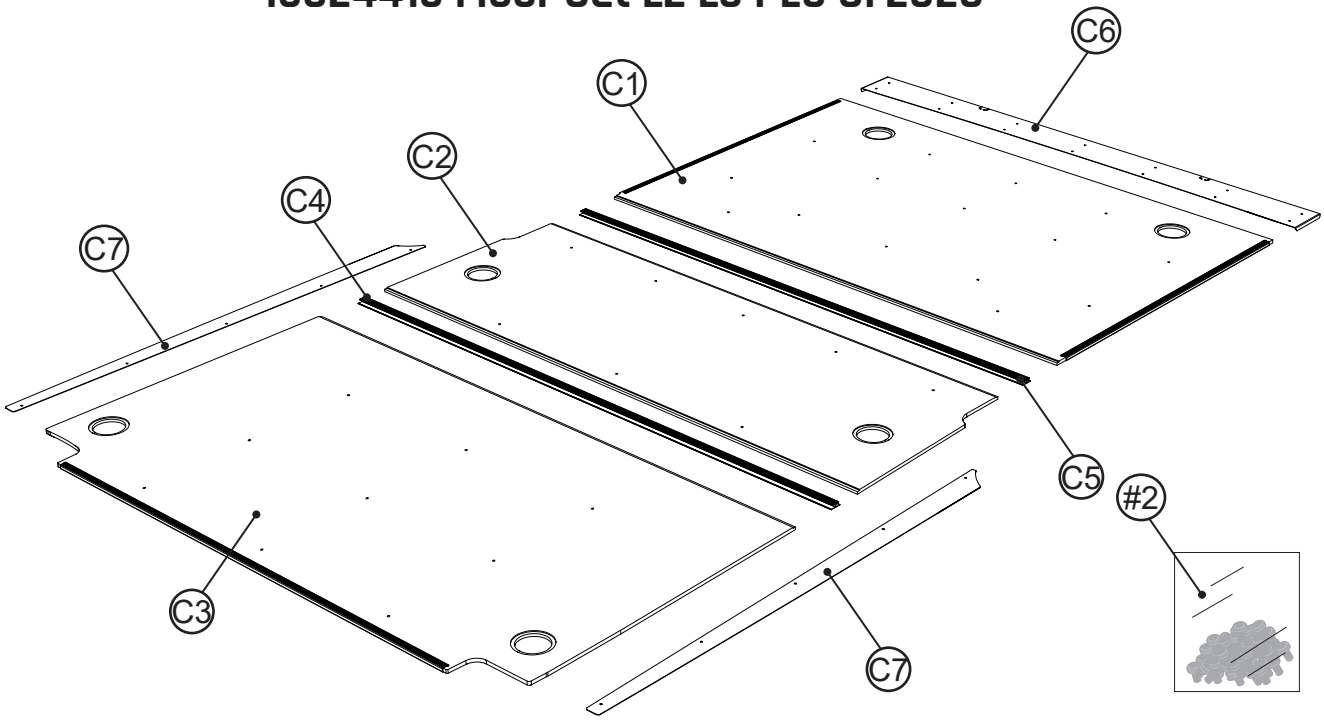


| Number | Quantity | Part Number | Definition |
|---|---|---|---|
| C1 | 1 | 15024402 | Floor Front L1 L2 L3 PEJ SF2020 ASSY |
| C2 | 1 | 15021235 | Floor Middle L2 L3 PEJ2020 |
| C3 | 1 | 15024403 | Floor Rear L1 L2 L3 PEJ SF2020 ASSY |
| C4 | 1 | 15024397 | H-profile 9mm L=1550 |
| C5 | 1 | 15024398 | H-profile 9mm L=1475 |
| C6 | 1 | 15021239 | Floor Extend Bracket PEJ2020 |
| C7 | 2 | 15024408 | Floor Extend Bracket Rear Side L2 L3 PEJ SF2020 |
| #2 | 1 | 15024404 | Fitting Kit Floor Set L1 L2 L3 PEJ SF2020 |

# 15018478 Supplement Bracket Set 1SLD PEJ ASSY SE

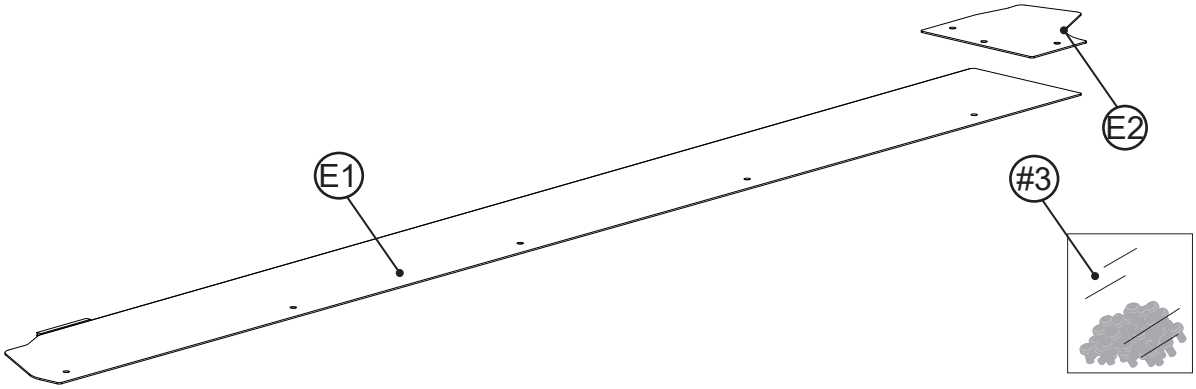


| Number | Quantity | Part Number | Definition |
|---|---|---|---|
| E1 | 1 | 15018476 | Supplement Floor 1SLD PEJ |
| E2 | 1 | 15018477 | Floor Supplement 1SLD Orig Sep PEJ |
| #3 | 1 | 15018479 | Fitting Kit Suppl Bracket Floor 1SLD PEJ |

# 2x 15010236 Handle Assy

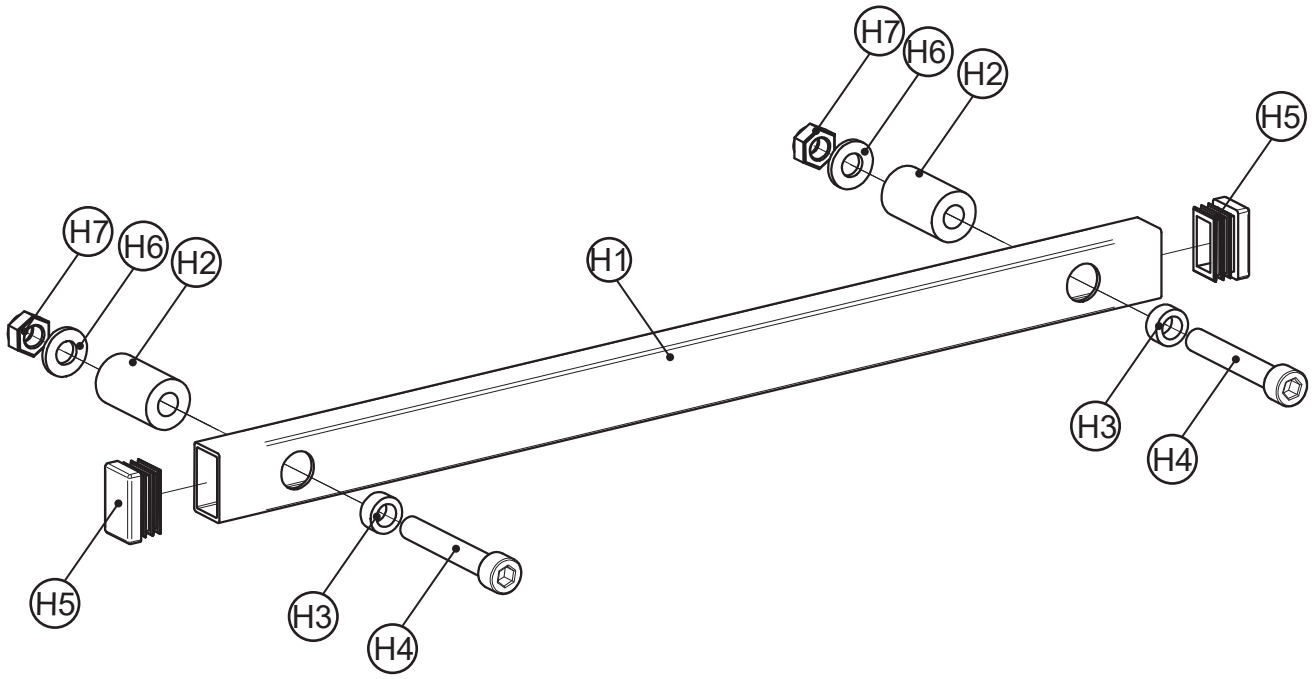


| Number | | Quantity | Part Number | Definition |
|---|---|---|---|---|
| H | H1 | 2 | 15009441 | Handle Tube 25x15x286 |
| | H2 | 2 | 15009443 | Spacer Ø8,3x18x30 Nylon Black |
| | H3 | 2 | 15009443 | Spacer Ø8,1x13x6mm Galv |
| | H4 | 2 | 15009444 | Screw M8x50 Cylinderh Hex |
| | H5 | 2 | 15009438 | End sleeve Black |
| | H6 | 2 | 8,4x17x2 | M8 Washer, DIN 125 |
| | H7 | 2 | 8 NMU | Mutter M8 Nyloc DIN985 |

# #1 15024411 Fitting Kit Steelbracket Set PEJ L3 SF2020

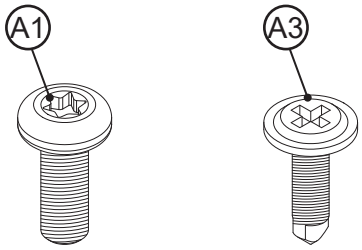


**x32** **x8**

| | |
|---|---|
| **A1** | 15003551 M6x16 TX30 pan (DIN 7985) |
| **A3** | 4,2x16 FL Screw Selfdrill flath elz |

# #2 15024404 Fitting Kit Floor Set L1 L2 PEJ SF2020

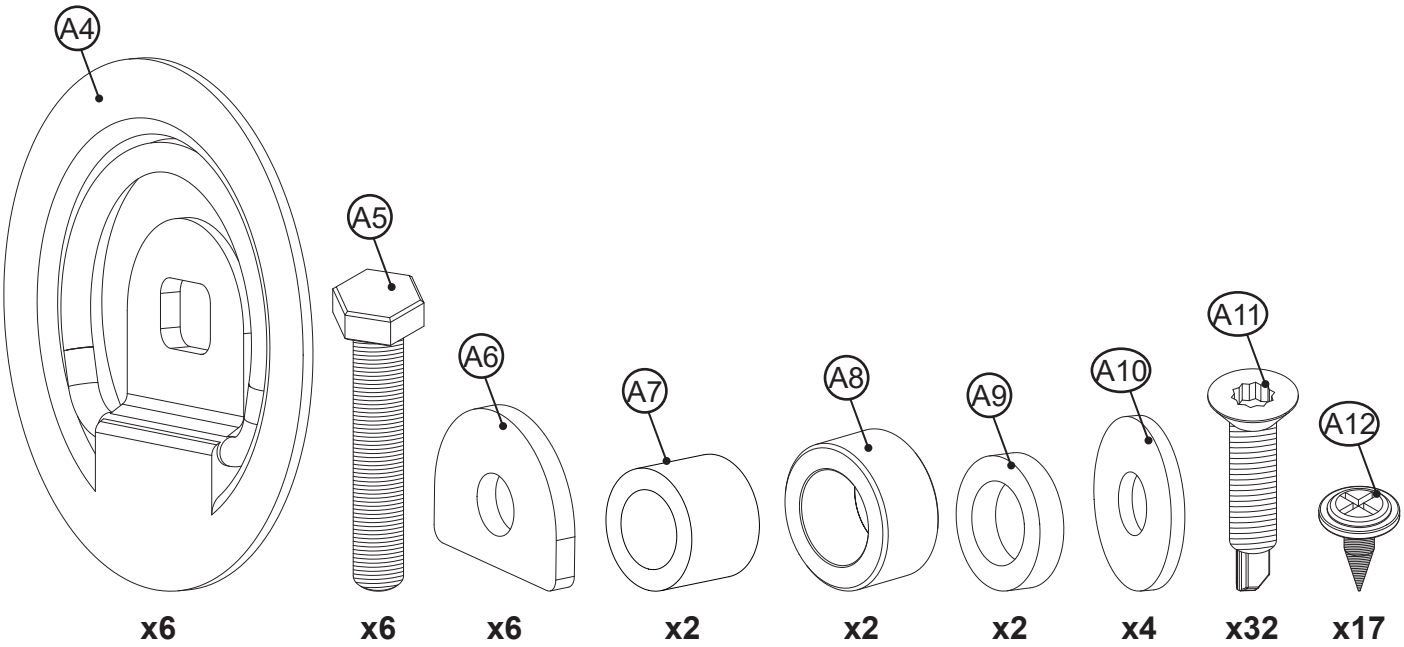


| | |
|---|---|
| **A4** | 15005497 Latch Cup Black Ø90 Ø12x15 1000Kp |
| **A5** | 15004713 M8x50 screw, 6K DIN 933 Black, ElZn+Cr3 |
| **A6** | 15005884 Washer Latchcup for Ø8 |
| **A7** | 15001584 Distansehylse D20 d13 h15 |
| **A8** | 13x20x10 Spacer, U-710 |
| **A9** | 11,3x18x4mm Plastic Spacer B-219 |
| **A10** | 15004714 Washer 8,4x23x2mm DIN 9021 Black, ElZn+Cr3 |
| **A11** | 15016947 Screw 4,8x25 Selfdrill Counters EW25 Elz |
| **A12** | 4,2x13 S Screw 4,2x13 Flathead Needle Black |

# #3 15018479 Fitting Kit Suppl Bracket Floor 1SLD PEJ

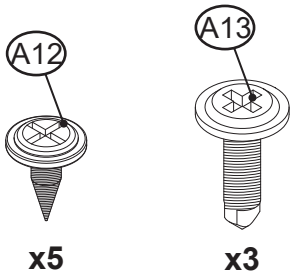


| | |
|---|---|
| **A12** | 4,2x13 S Screw 4,2x13 Flathead Needle Black |
| **A13** | 4,2x16 FLS Platescrew selfdrilling E45759 Black |

1

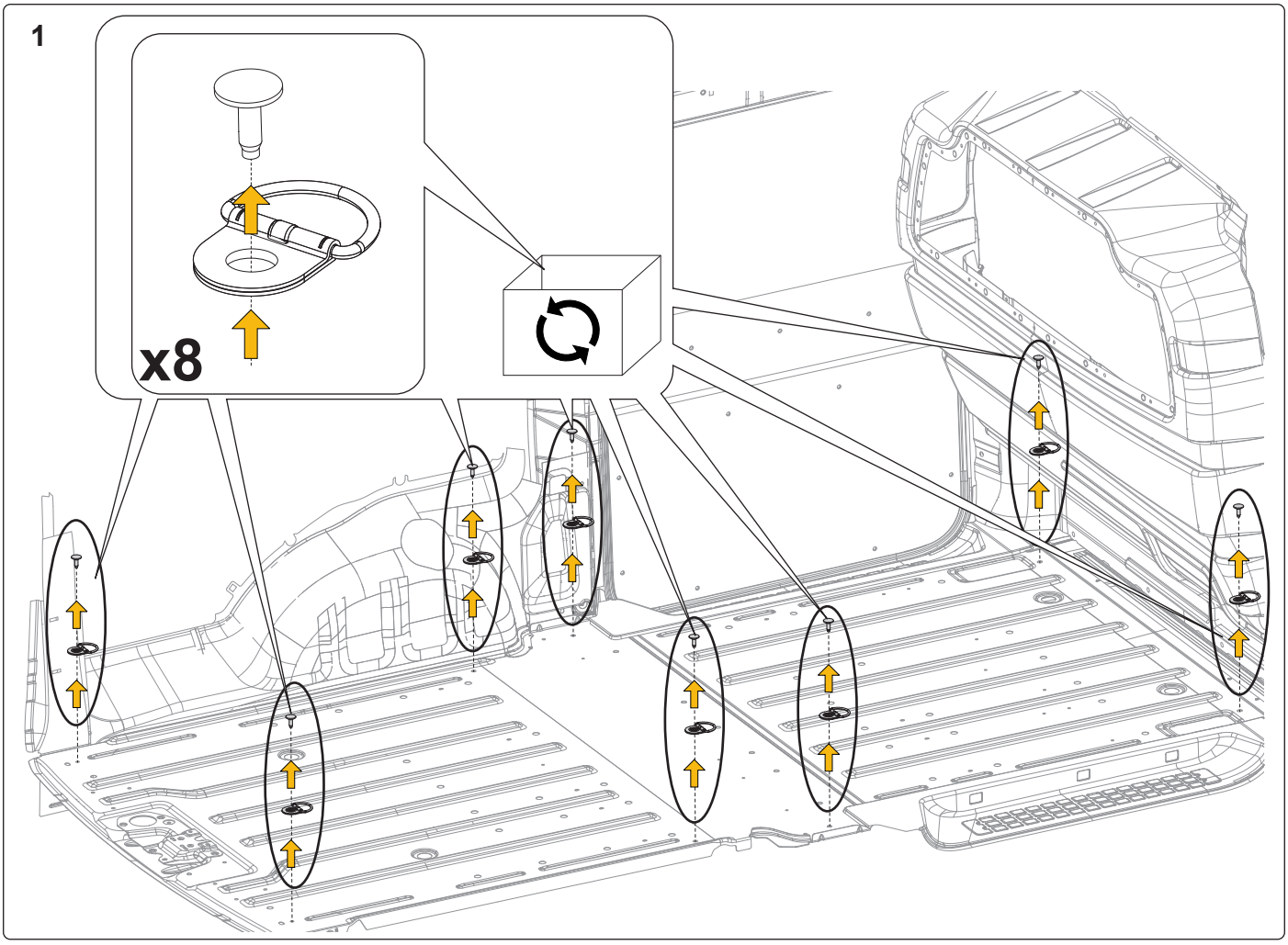


2

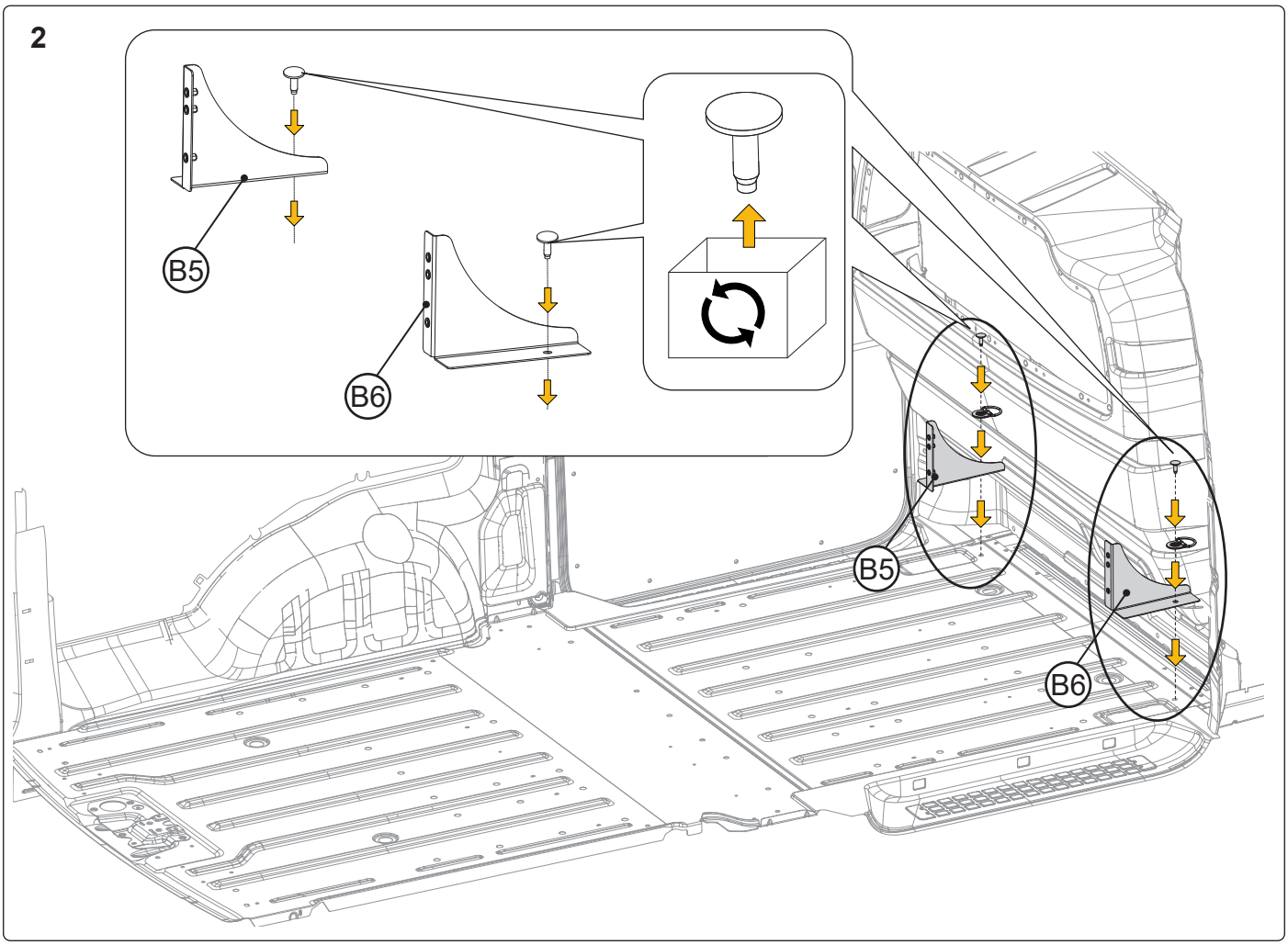

**3**

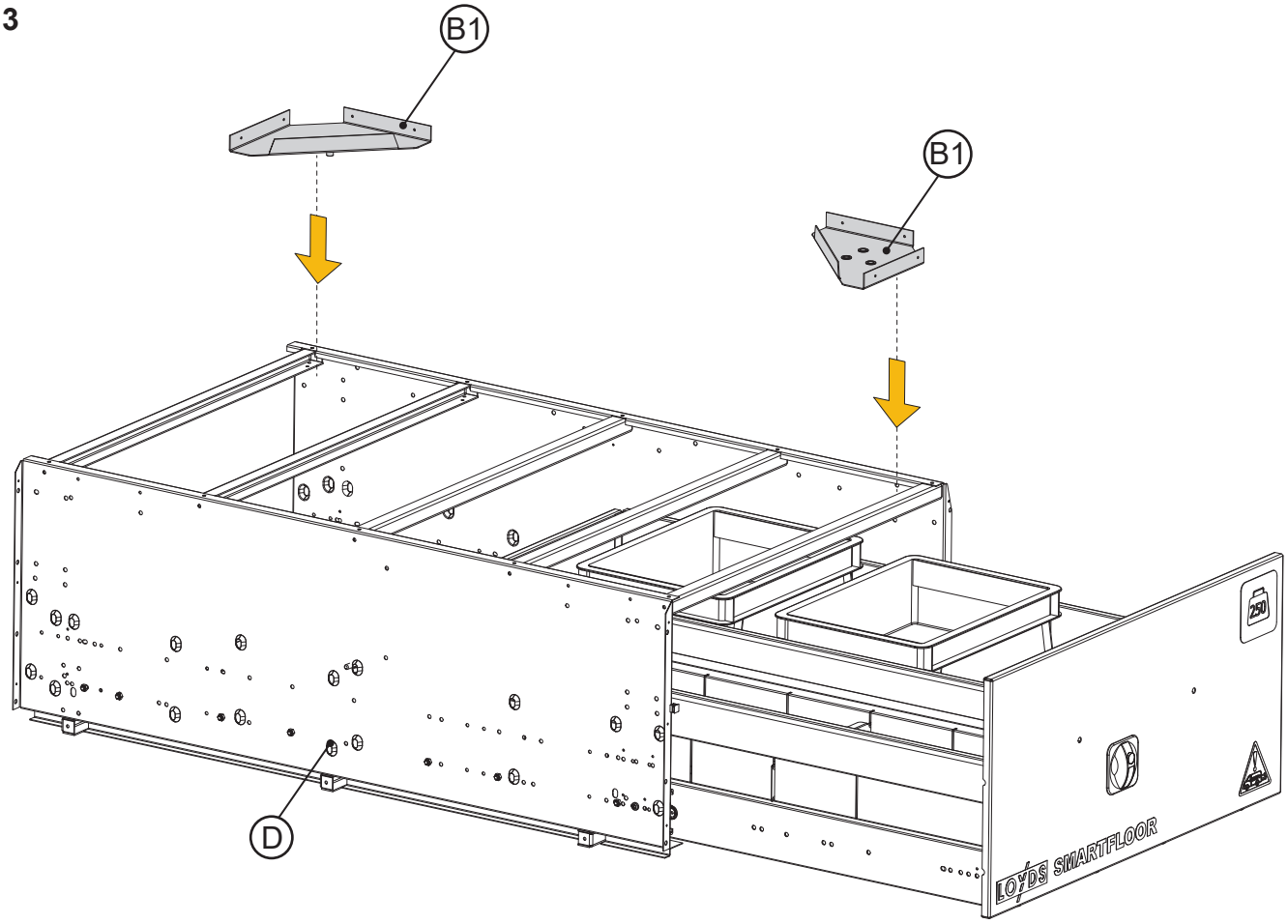
B1
B1
D
250
LOYDS SMARTFLOOR

**4**

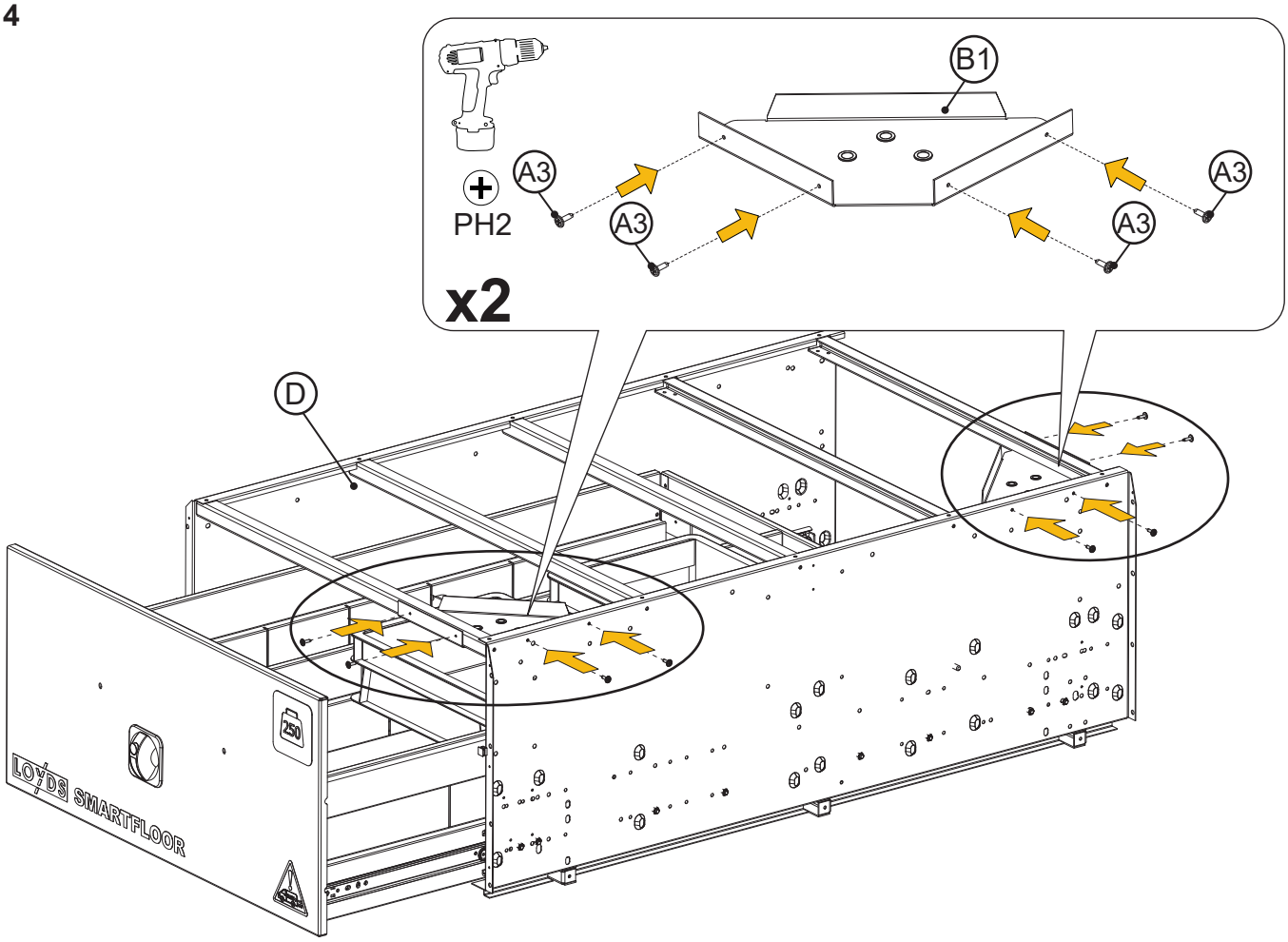
B1
A3
A3
A3
A3
PH2
x2
D
250
LOYDS SMARTFLOOR

5

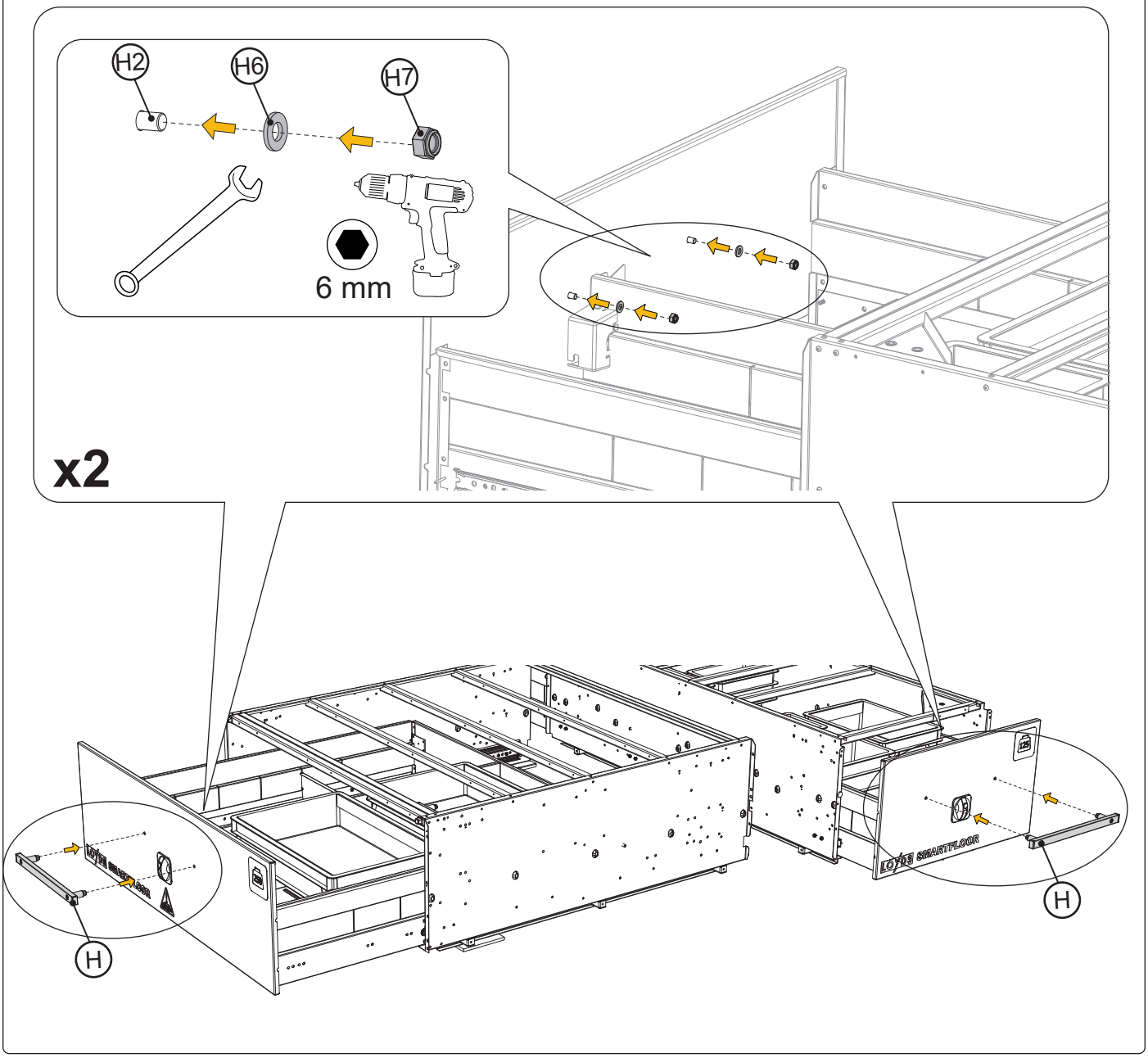


6

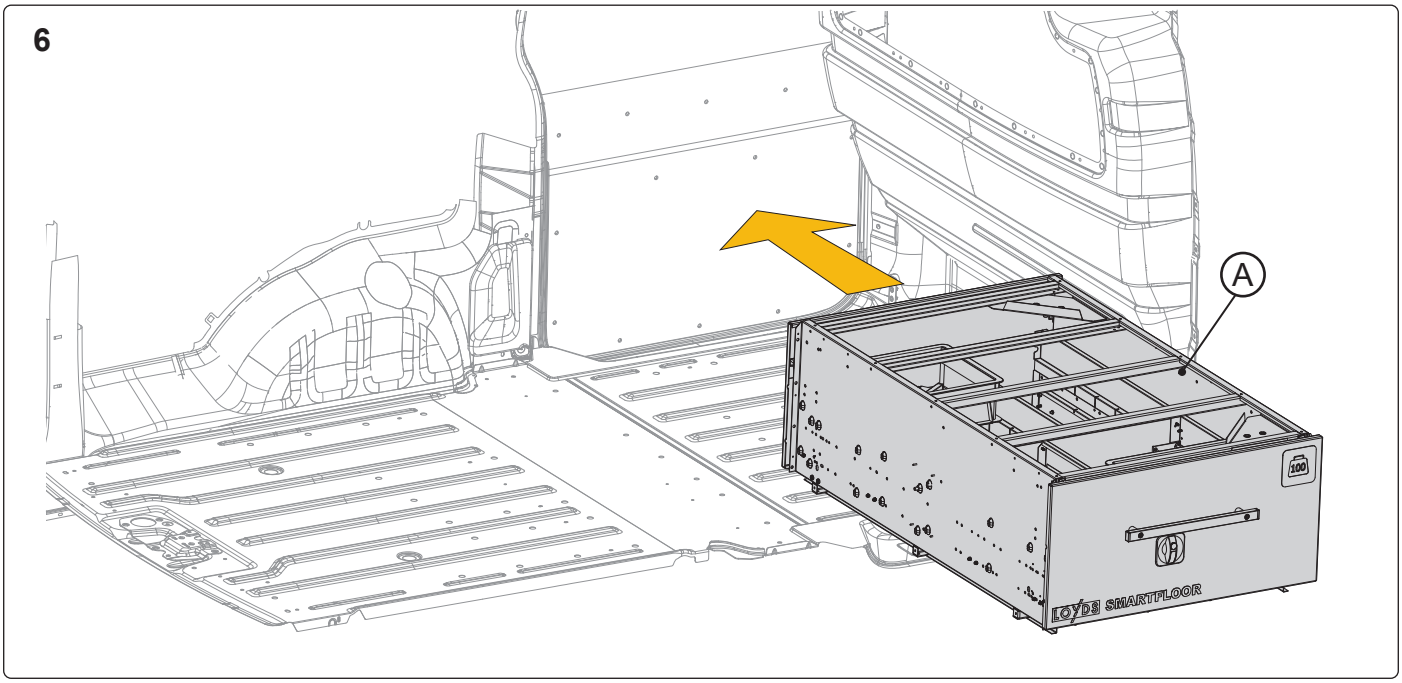

7

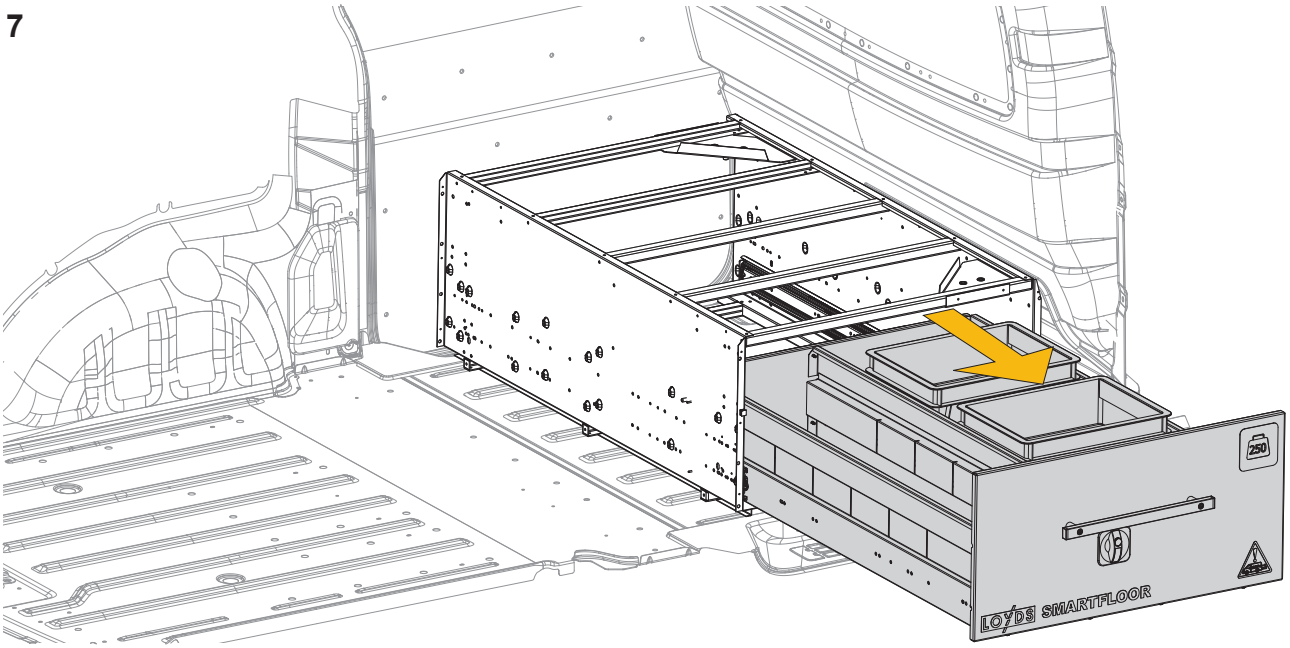


8

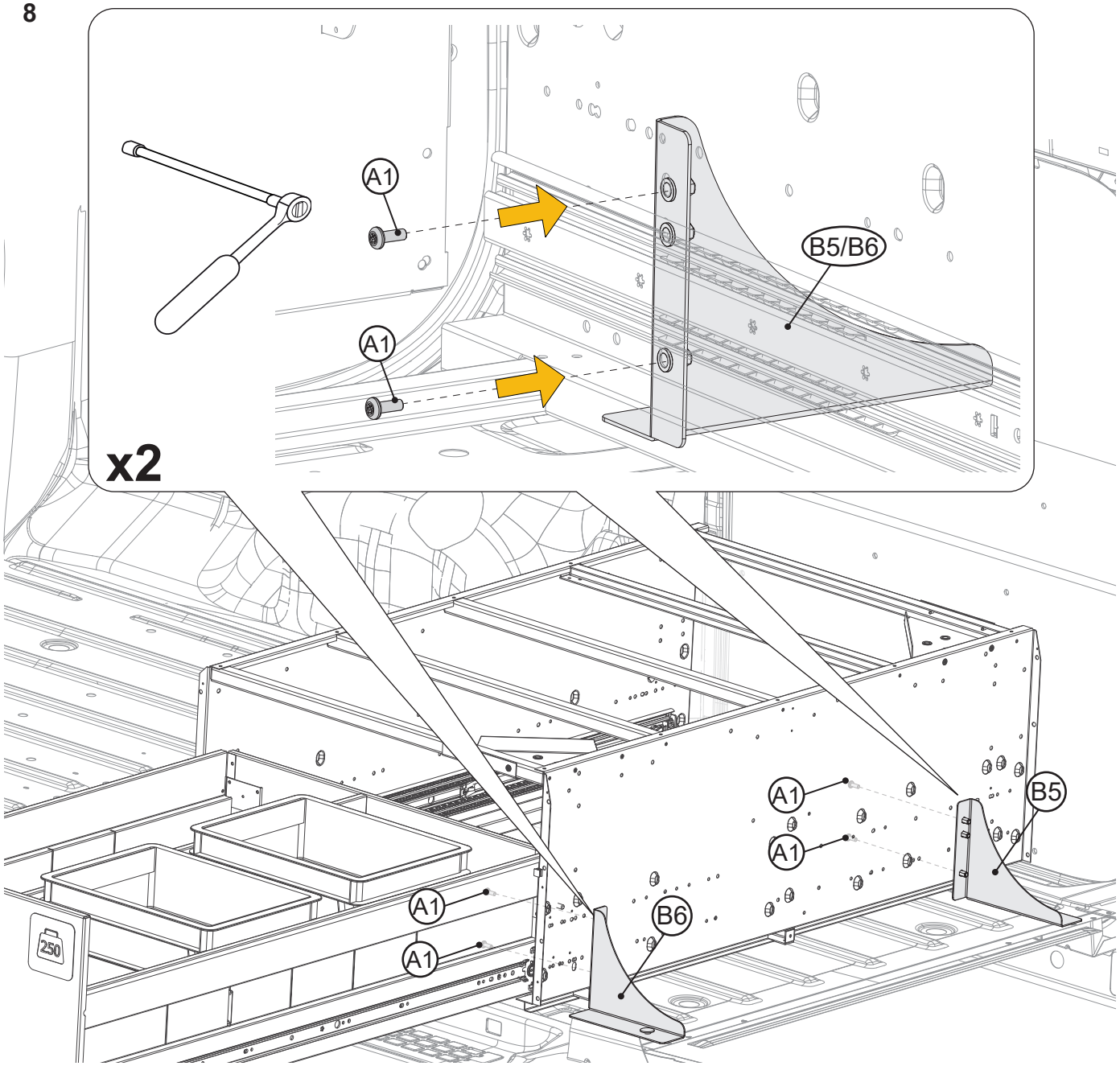

**9**

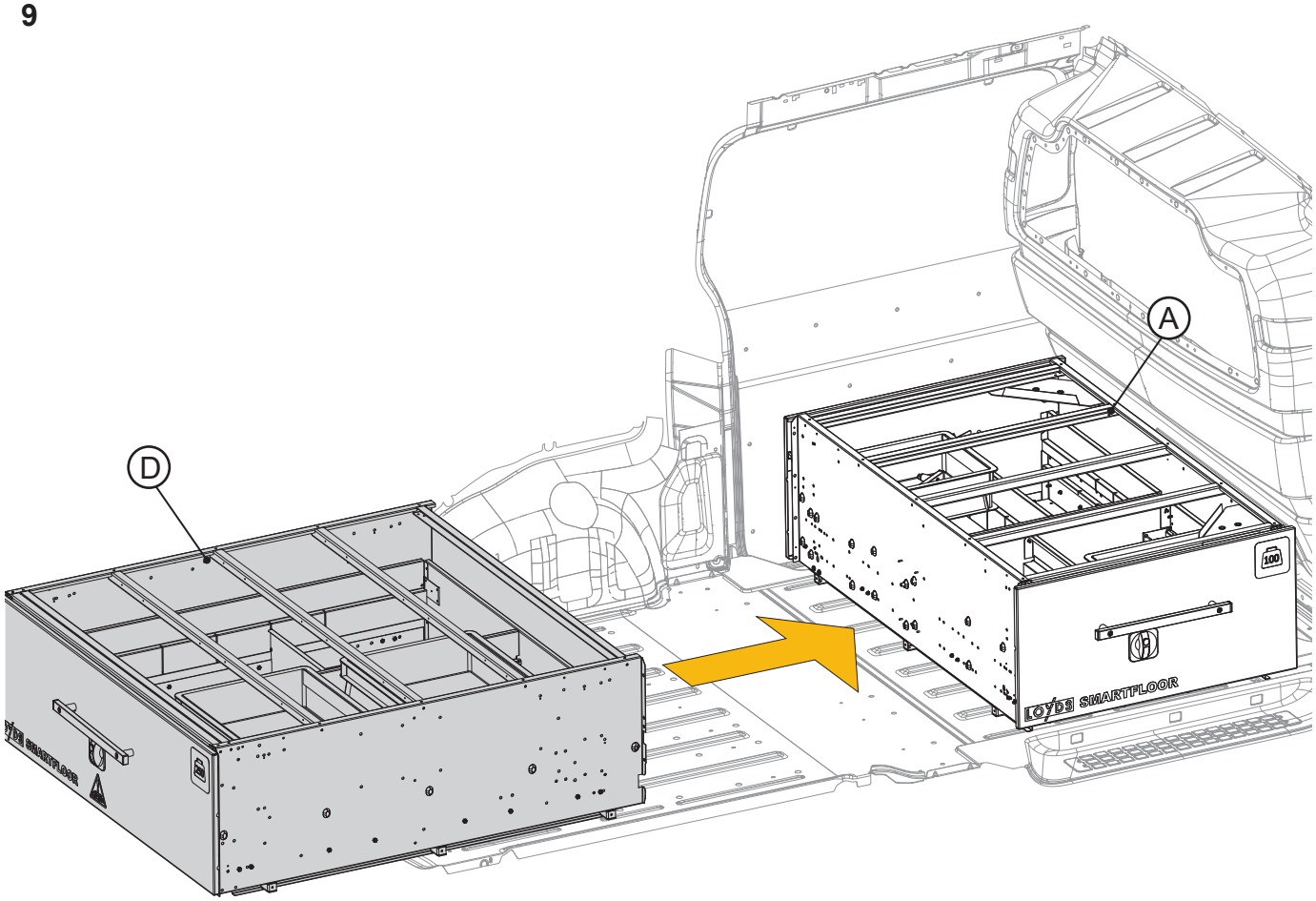
A
D
100
LOYDS SMARTFLOOR
LOYDS SMARTFLOOR

**10**

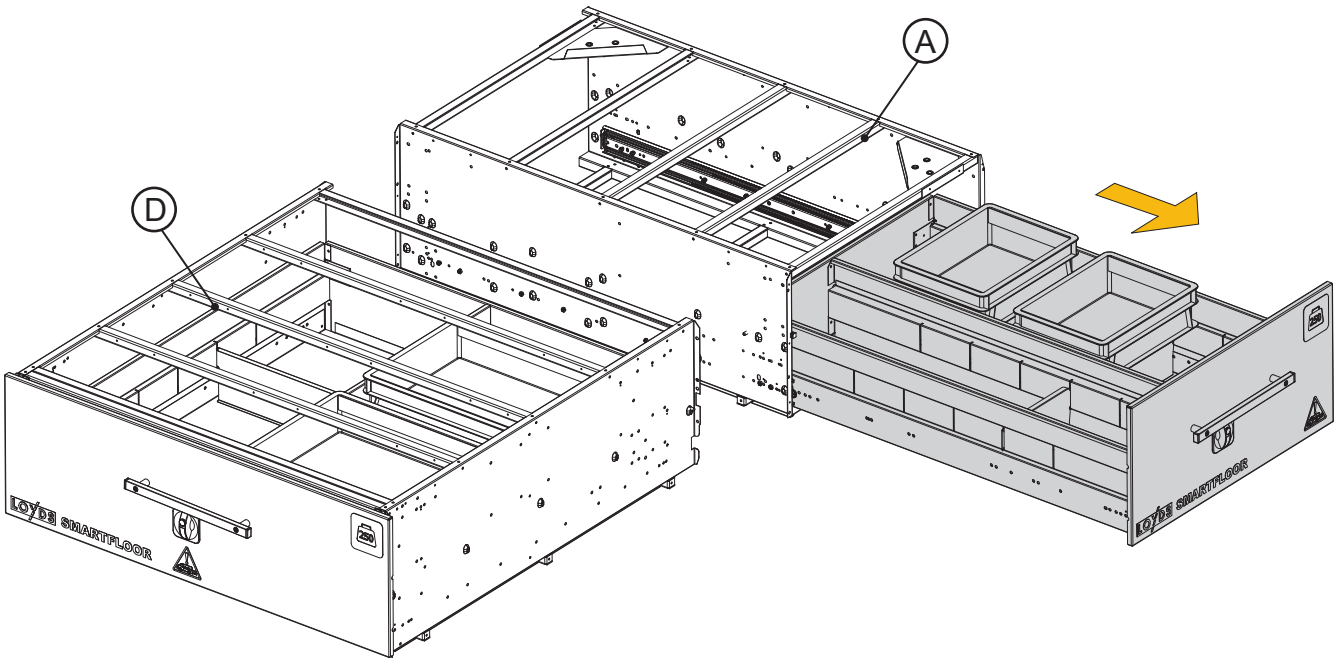
A
D
200
LOYDS SMARTFLOOR
200
LOYDS SMARTFLOOR

**11**

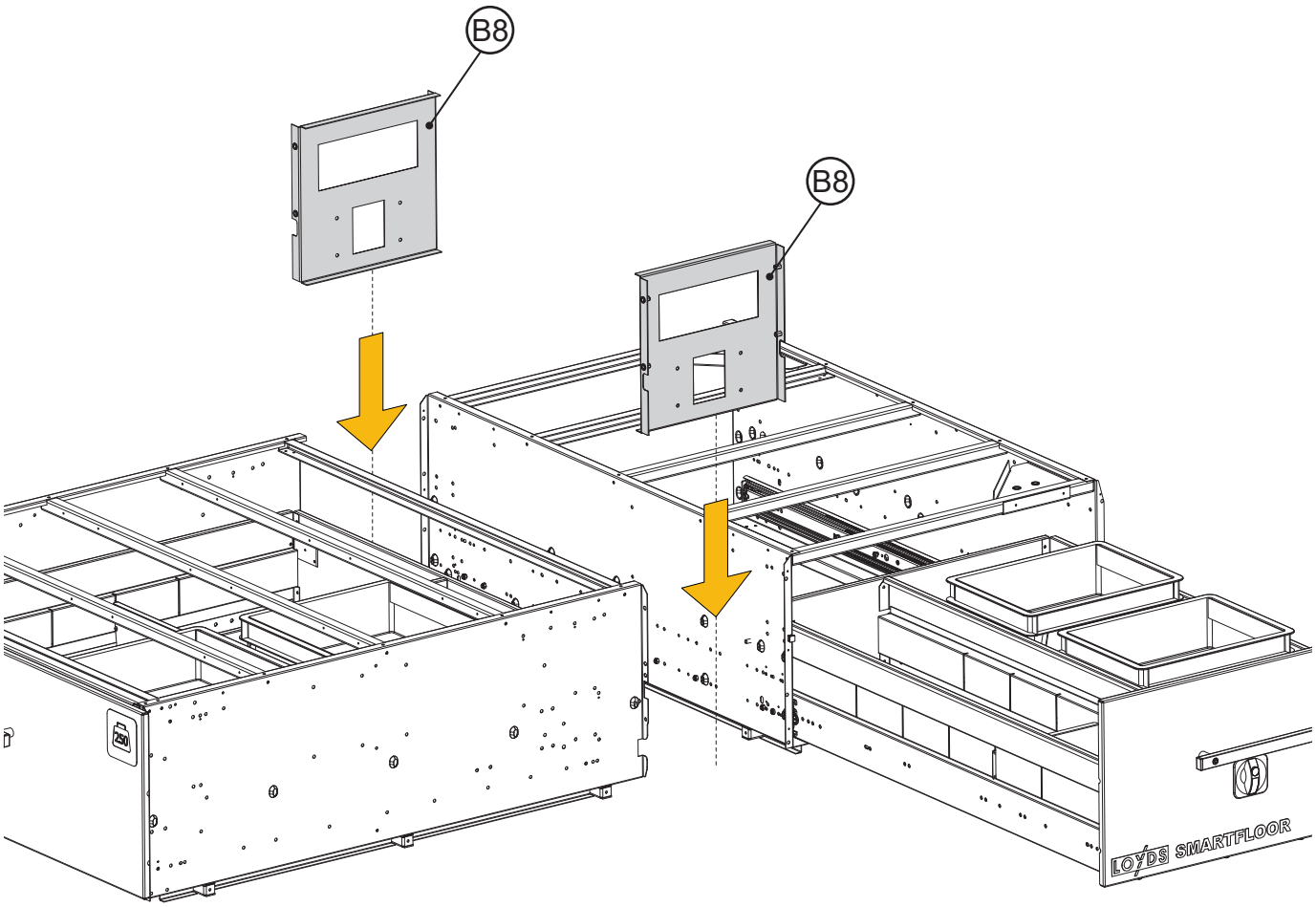


**12**

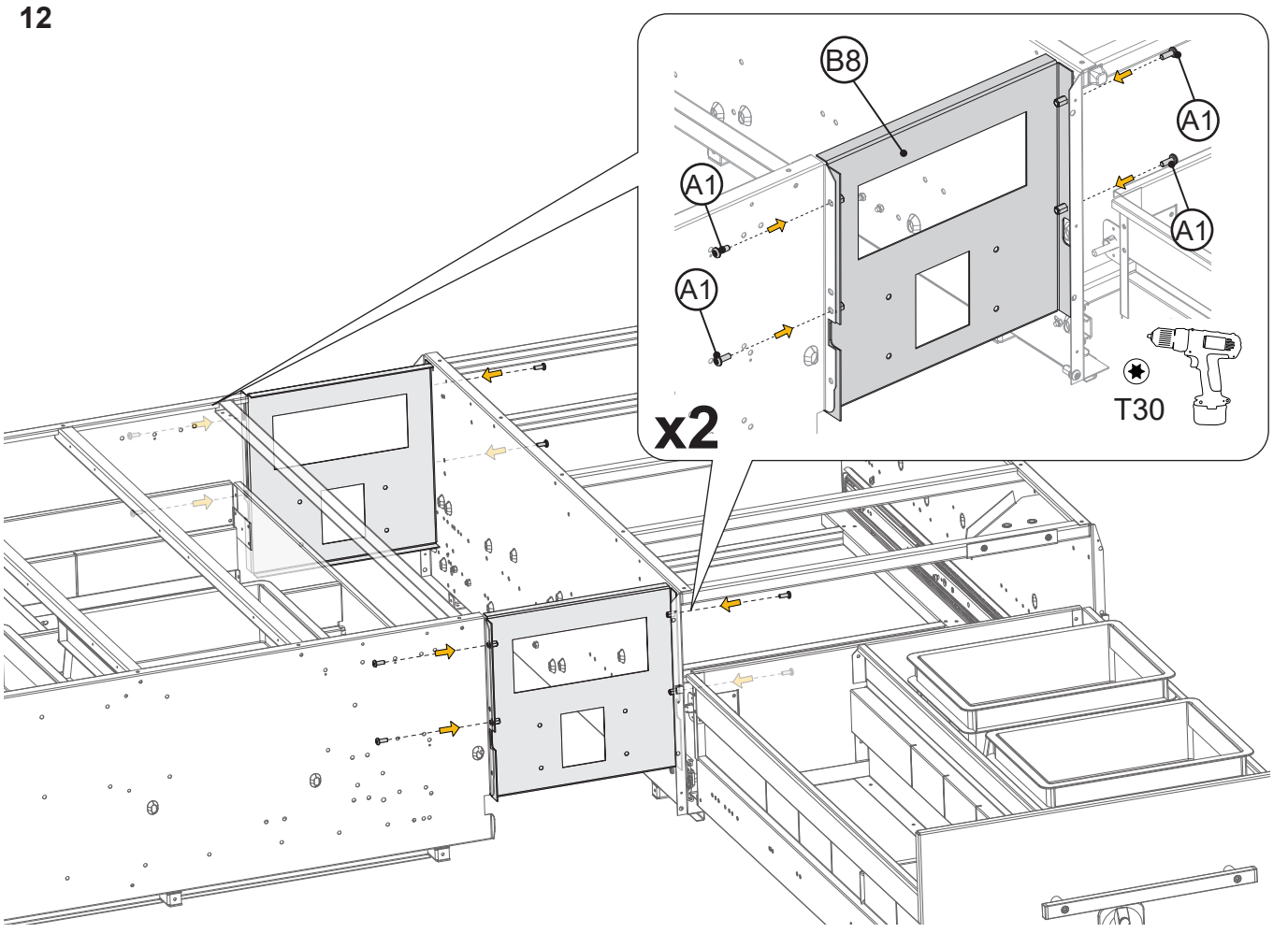

**13**

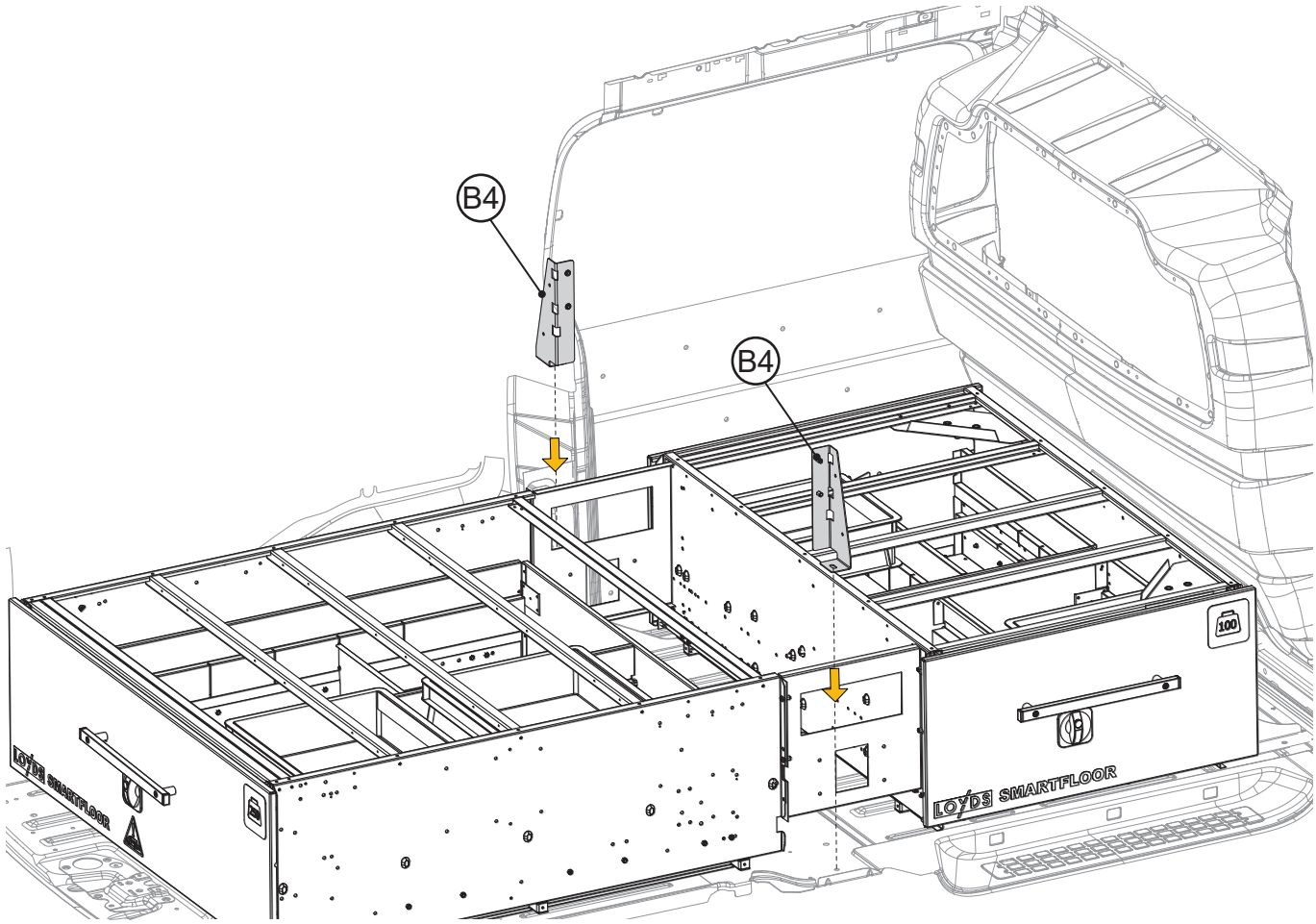
B4
B4
LOYDS SMARTFLOOR
LOYDS SMARTFLOOR
100

**14**

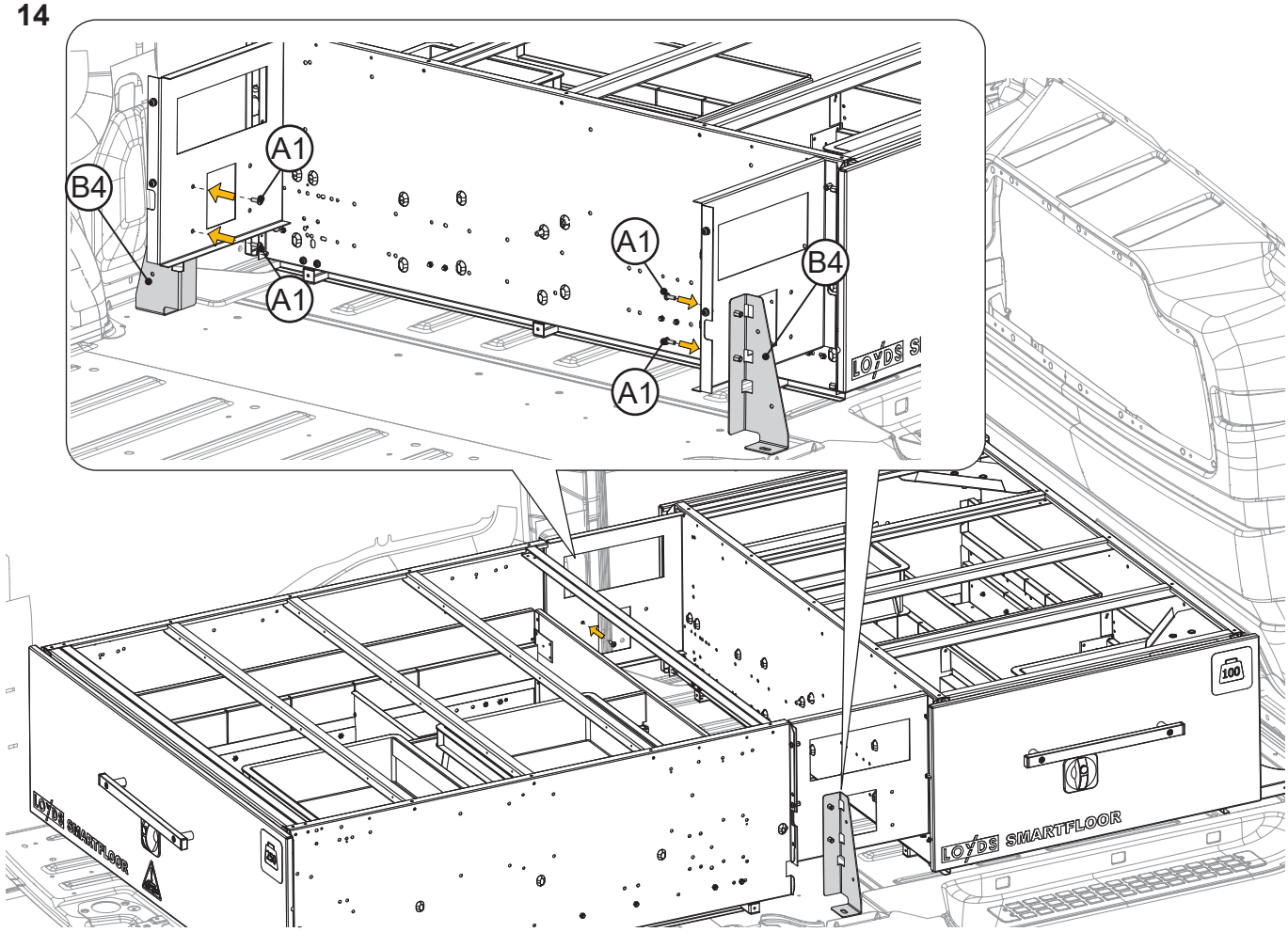
B4
A1
A1
A1
A1
B4
LOYDS SMARTFLOOR
LOYDS SMARTFLOOR
100

15

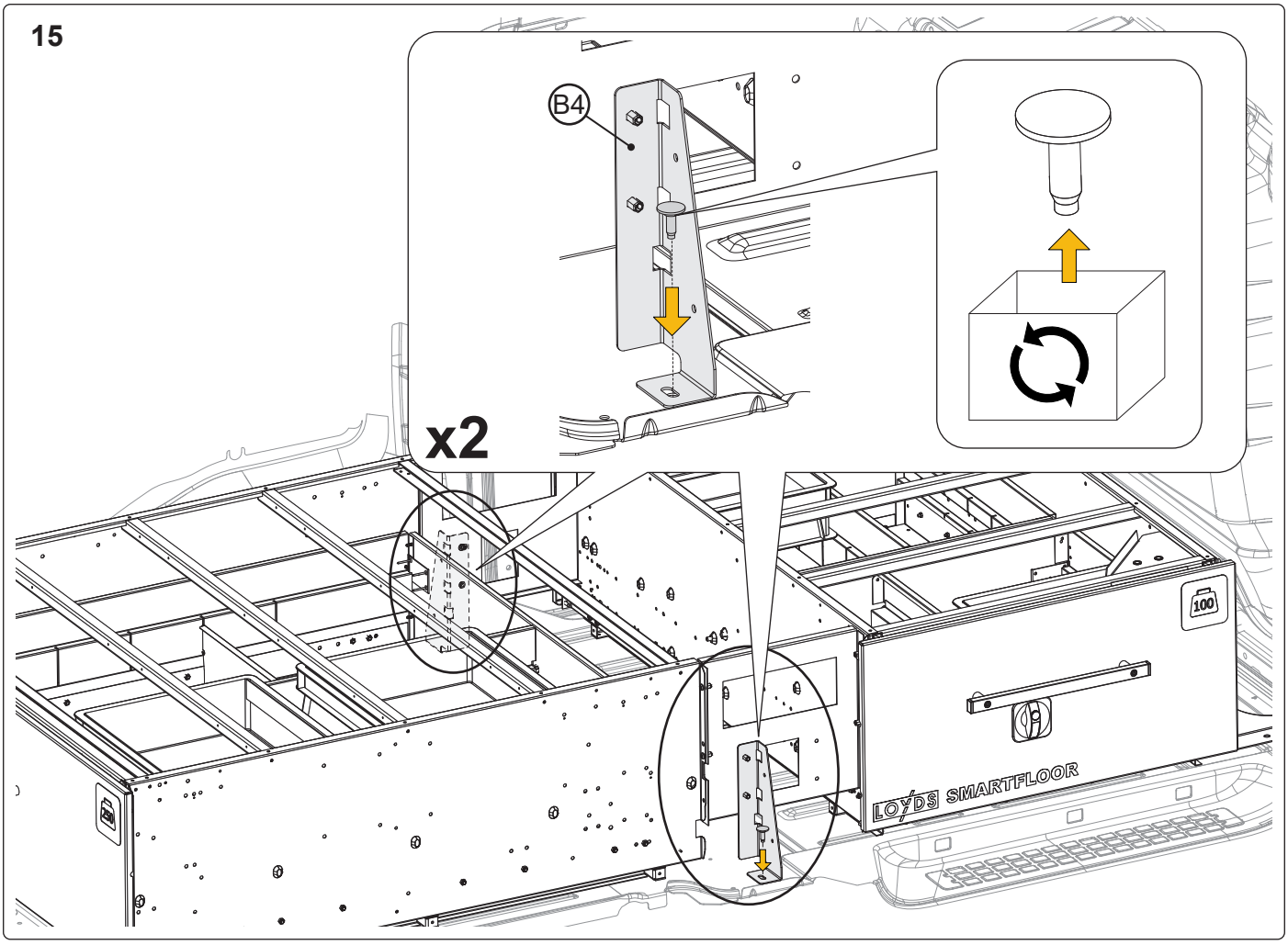


16

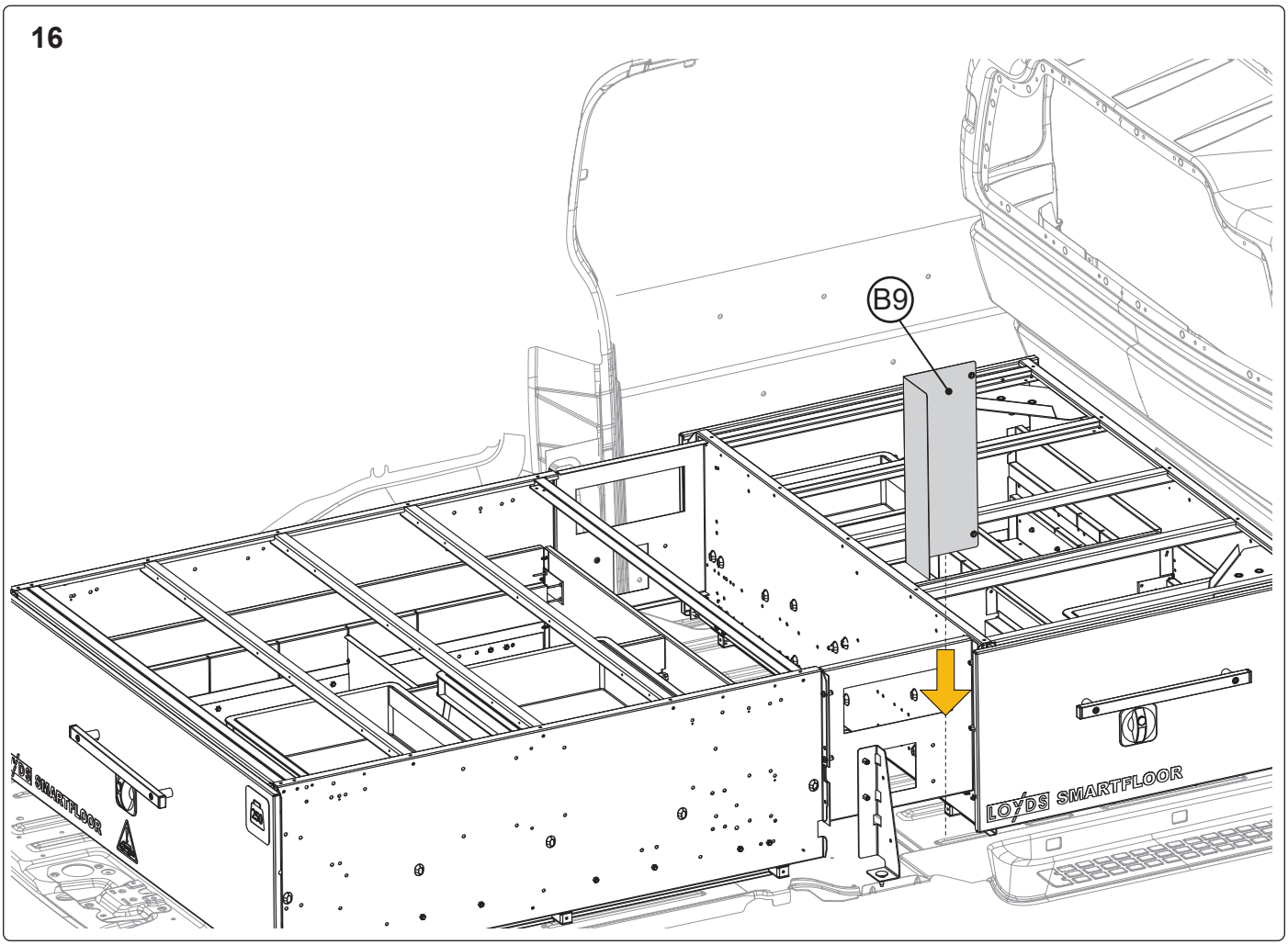

**17**

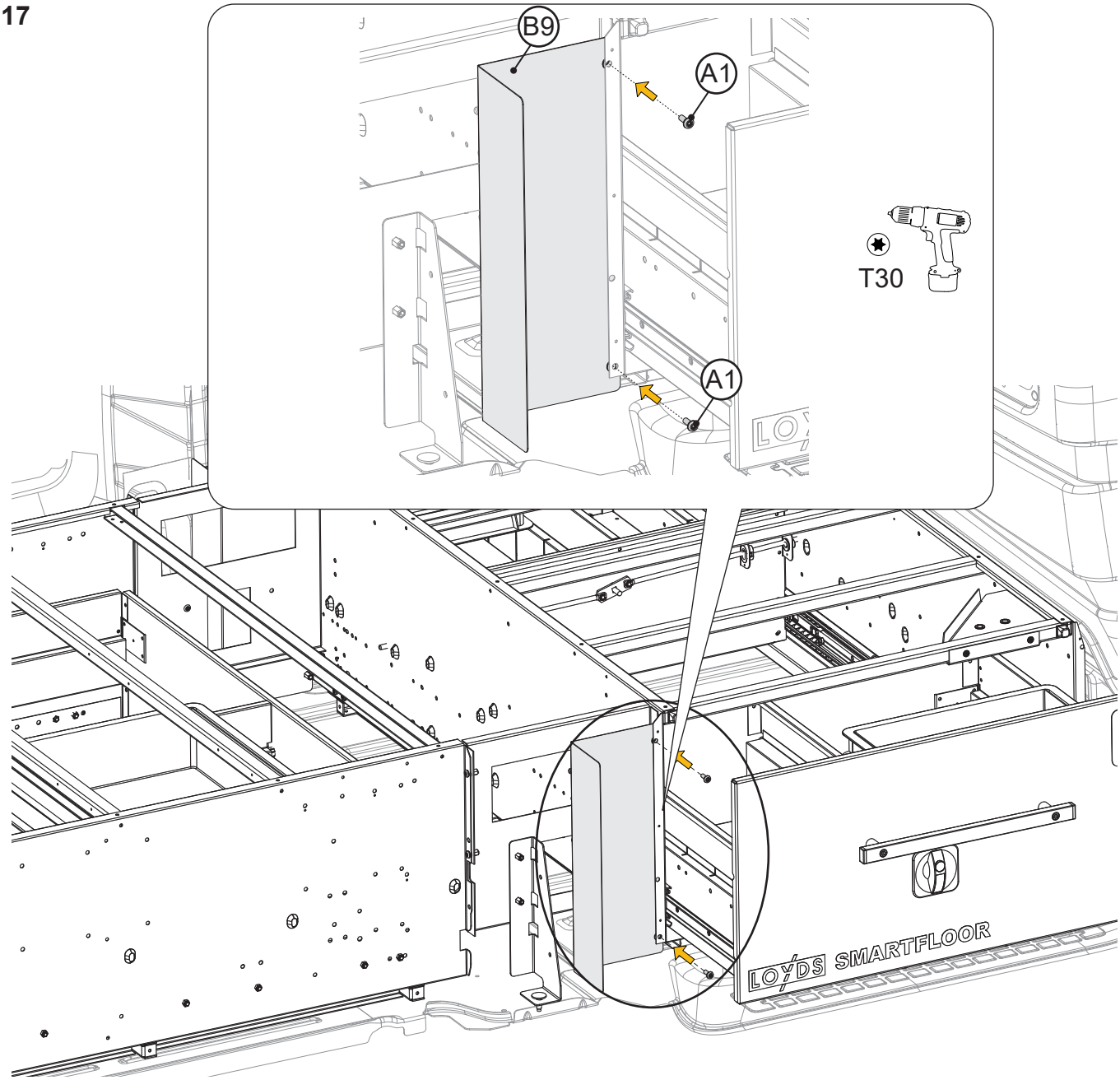


**18**

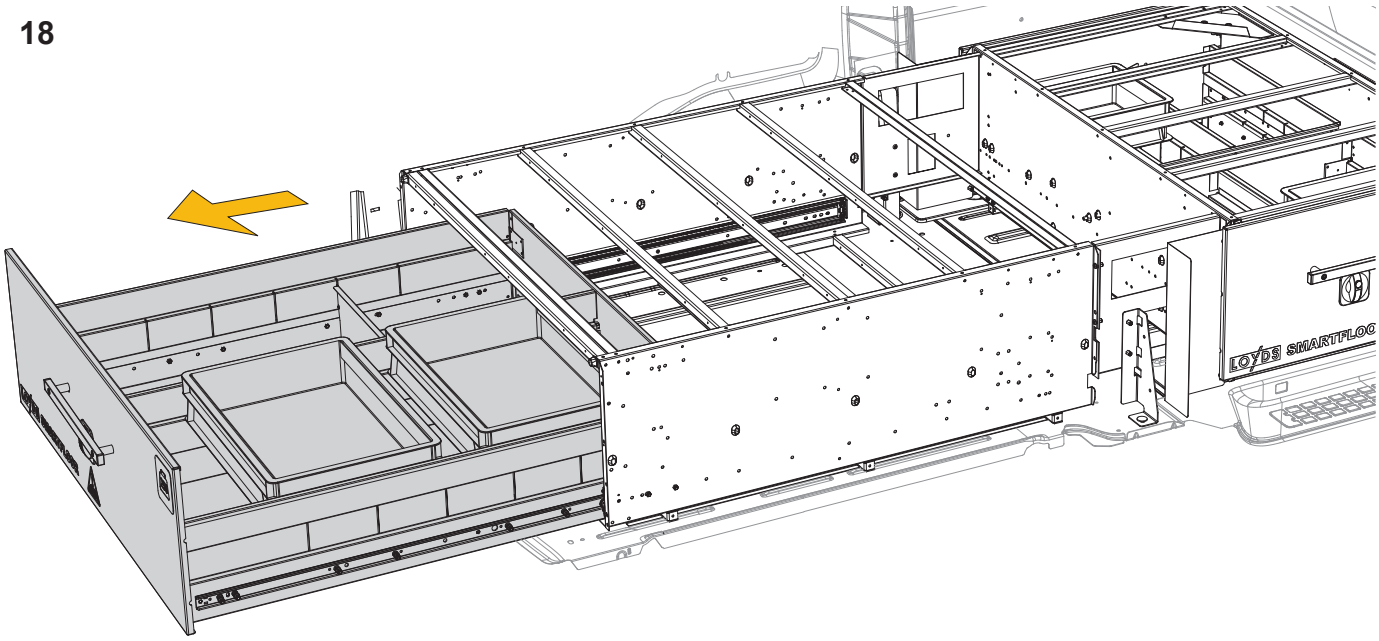

**19**

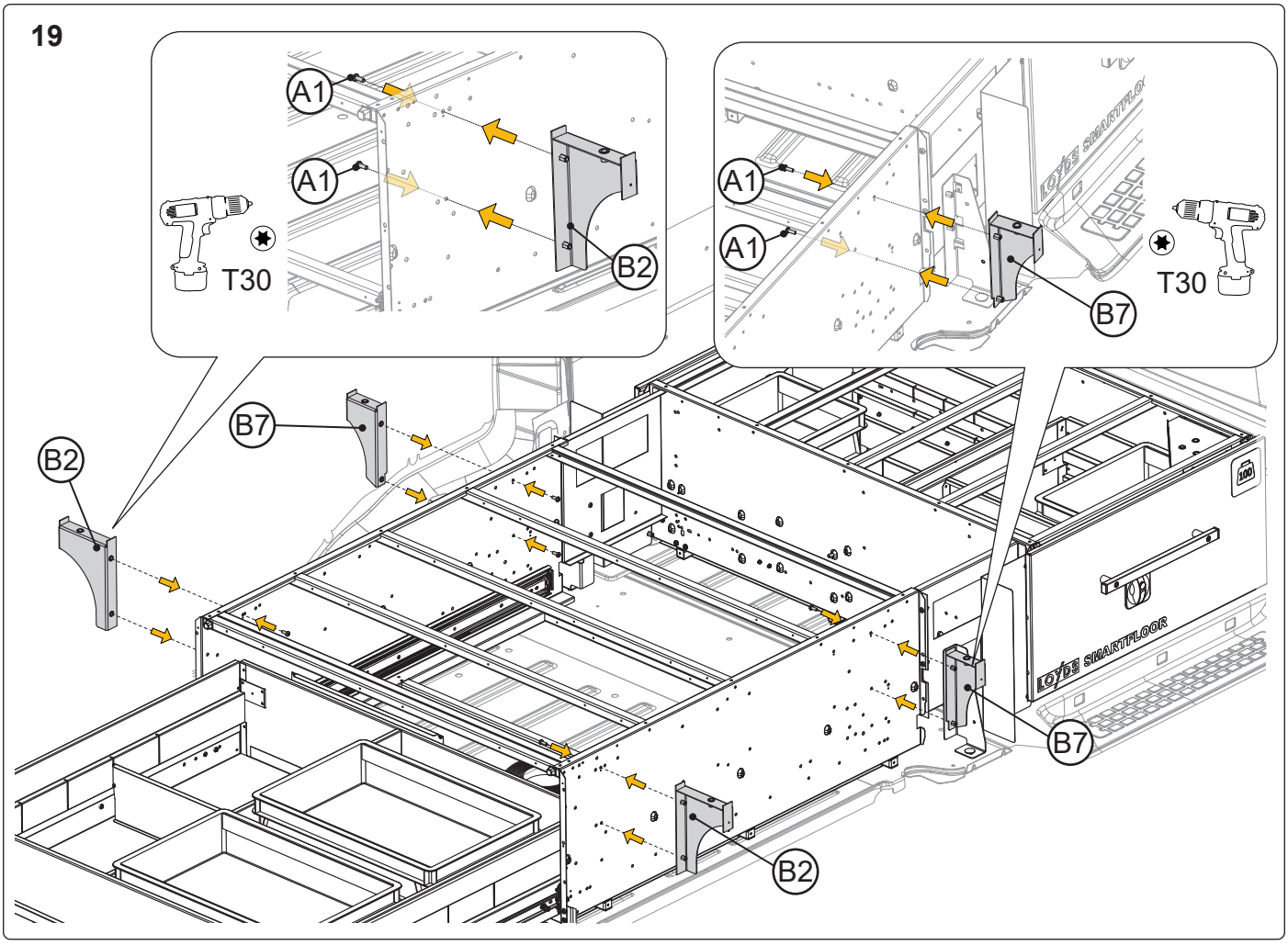
A1
A1
B2
T30
A1
A1
B7
T30
B7
B2
B7
B2
LOYDS SMARTFLOOR

**20**

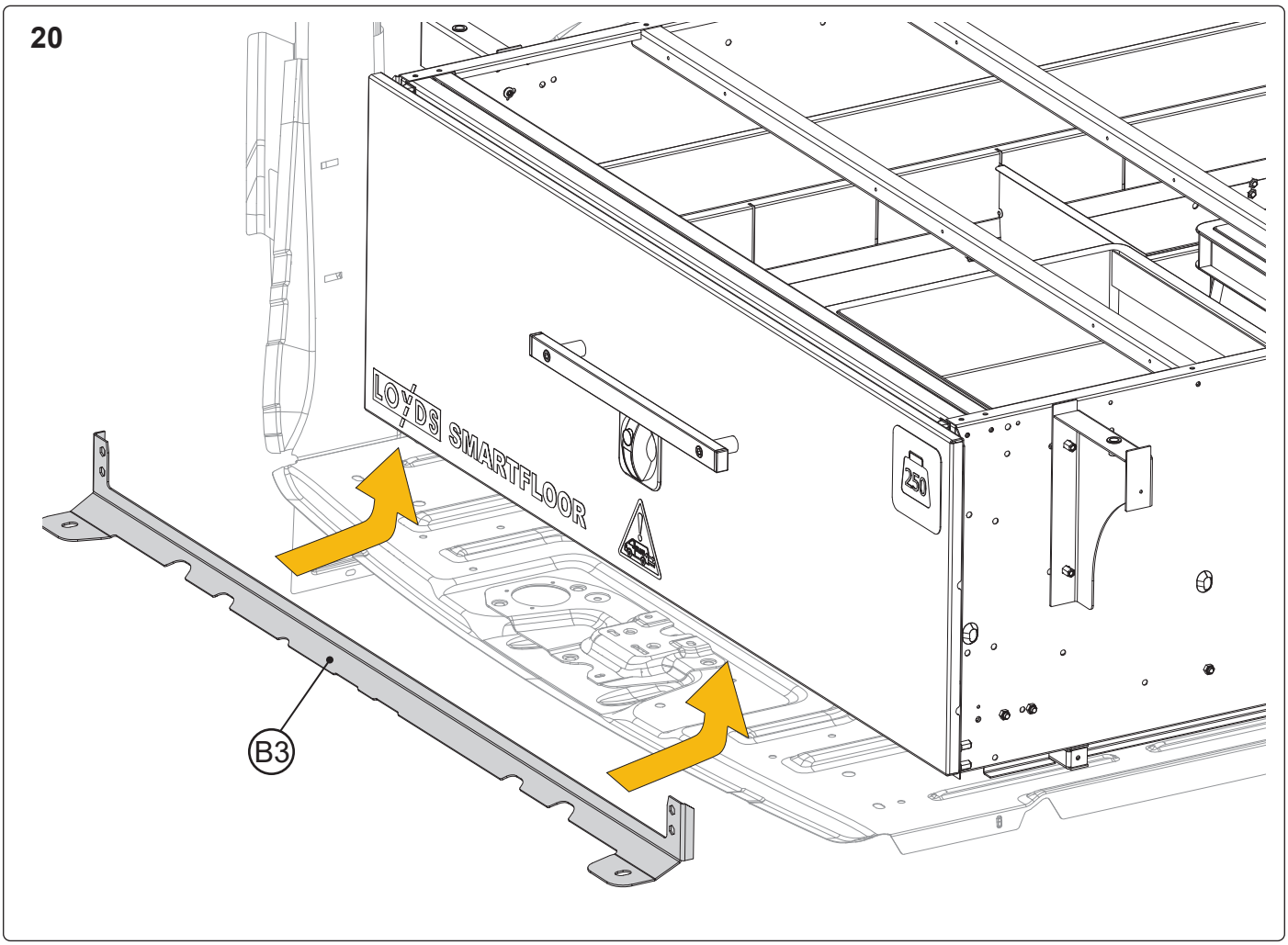
LOYDS SMARTFLOOR
250
B3

21

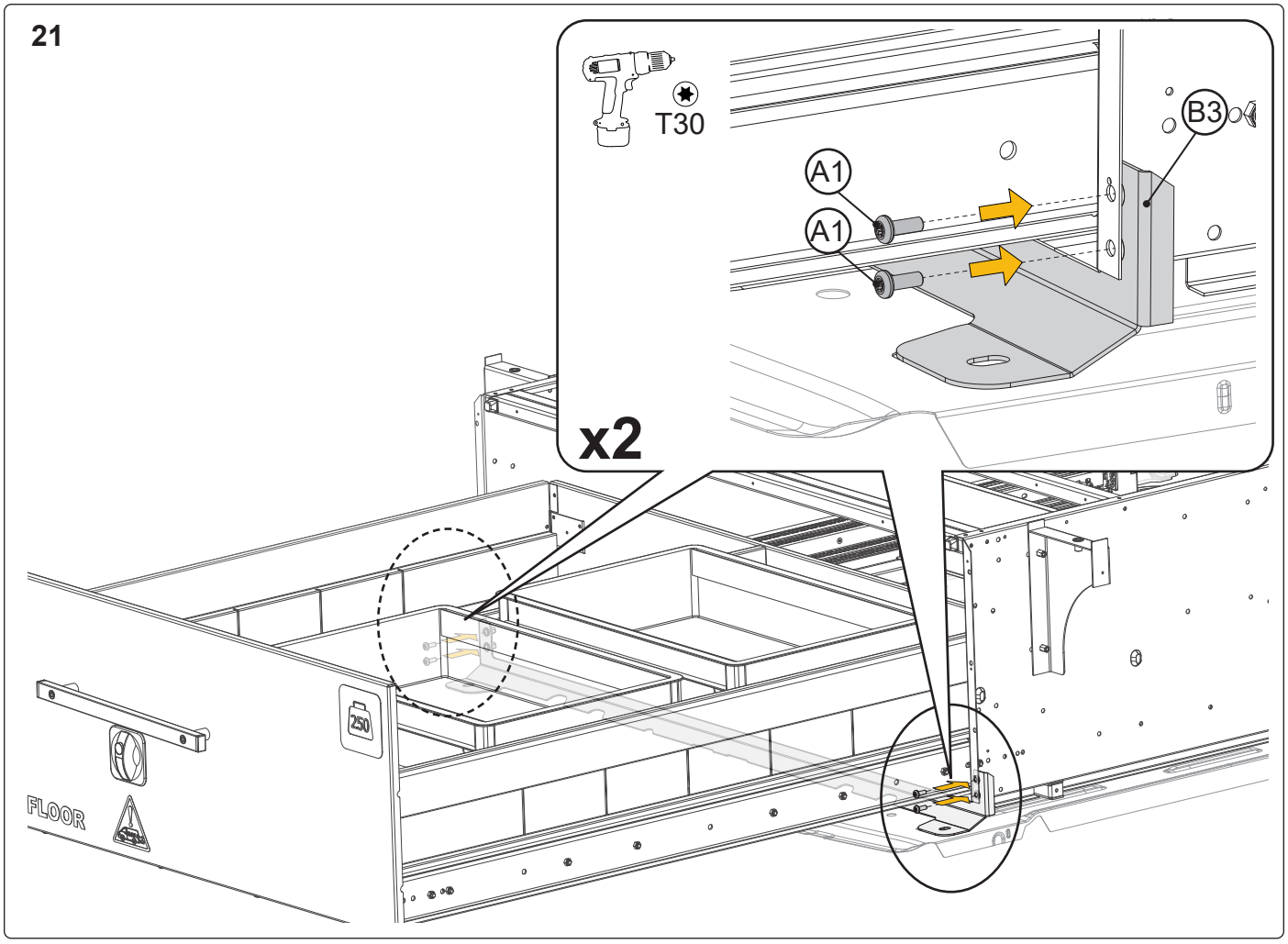


22

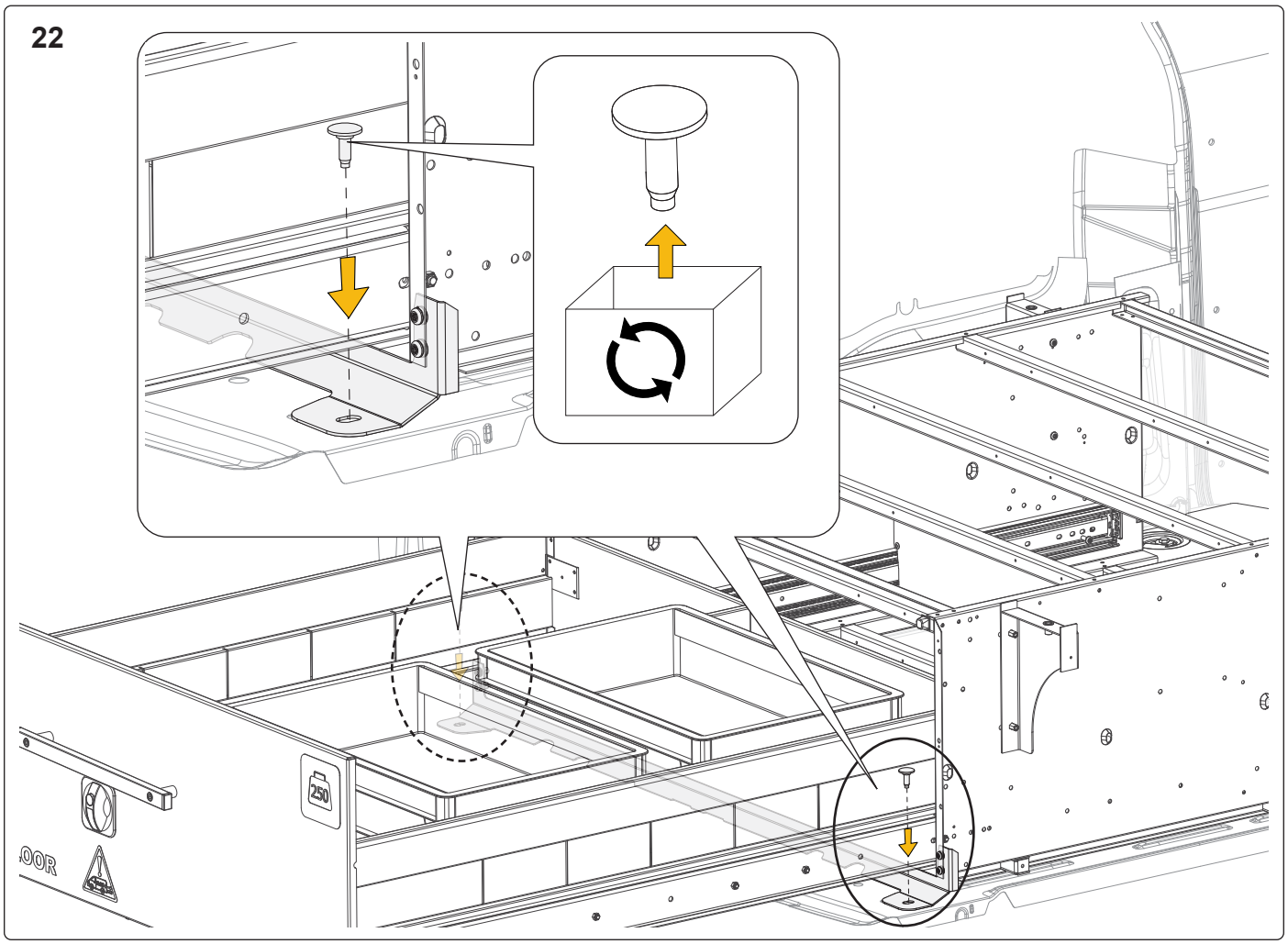

**23**

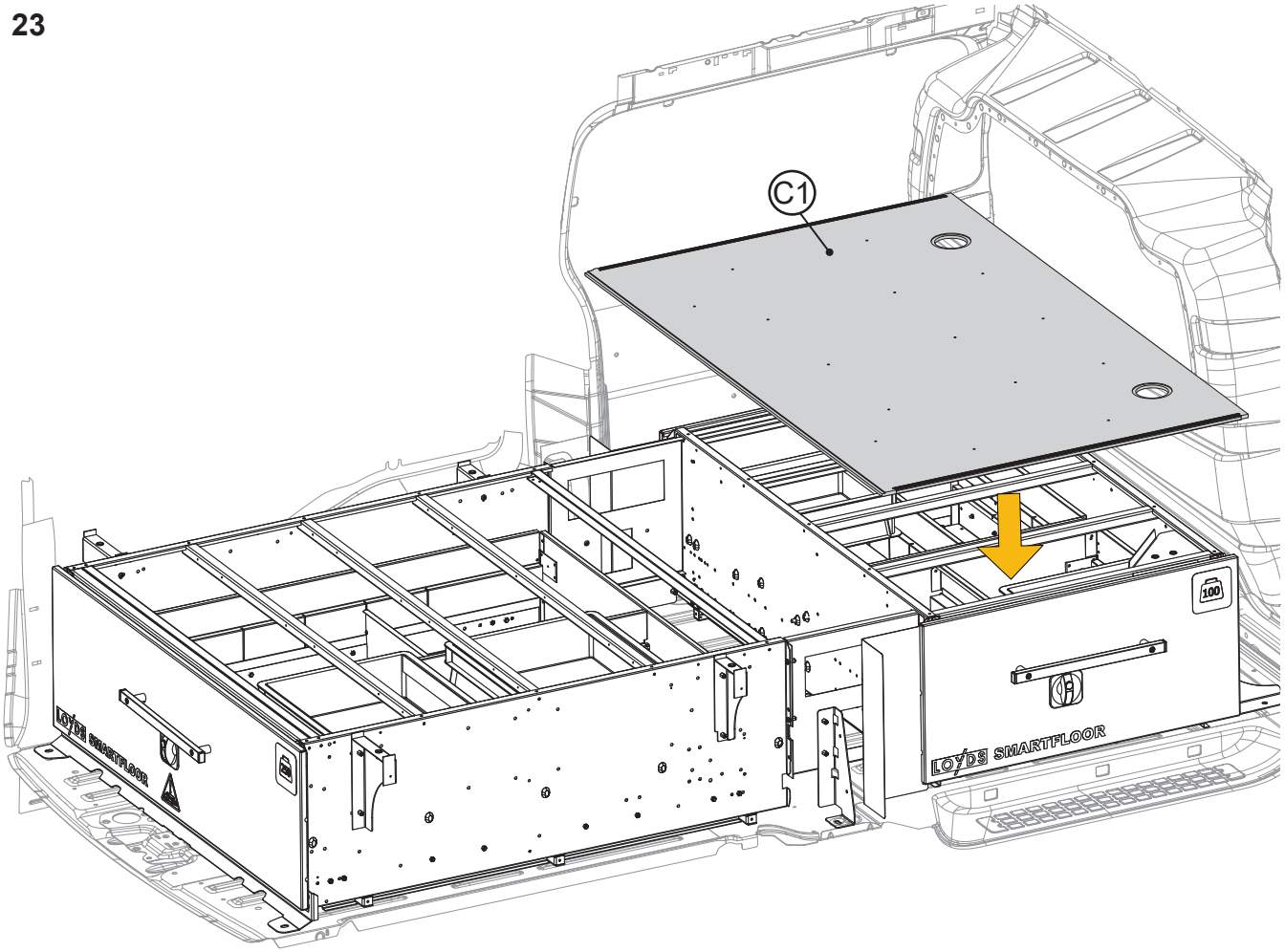
C1
100
LOYDS SMARTFLOOR
LOYDS SMARTFLOOR

**24**

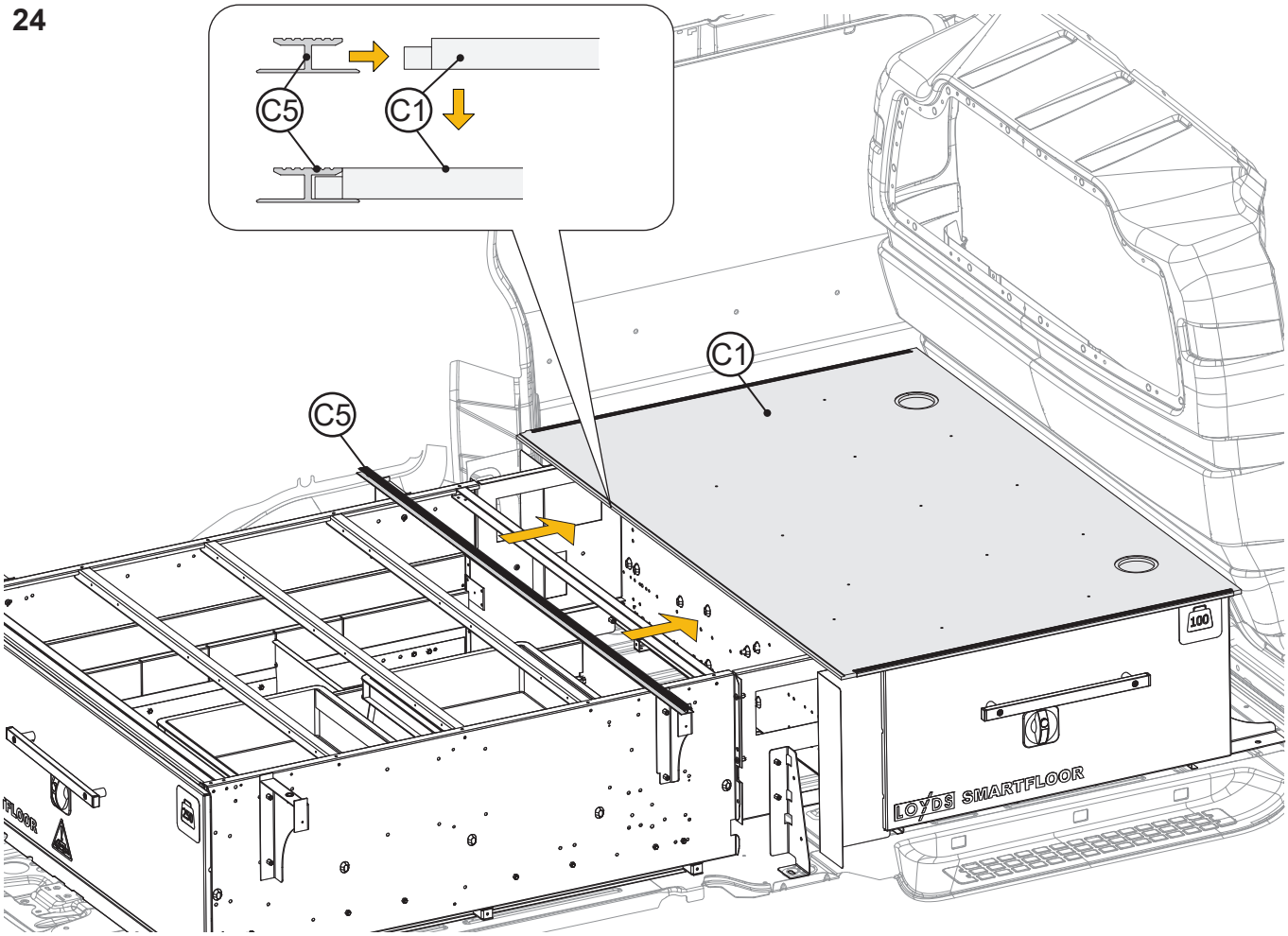
C5
C1
C1
C5
100
LOYDS SMARTFLOOR

**25**

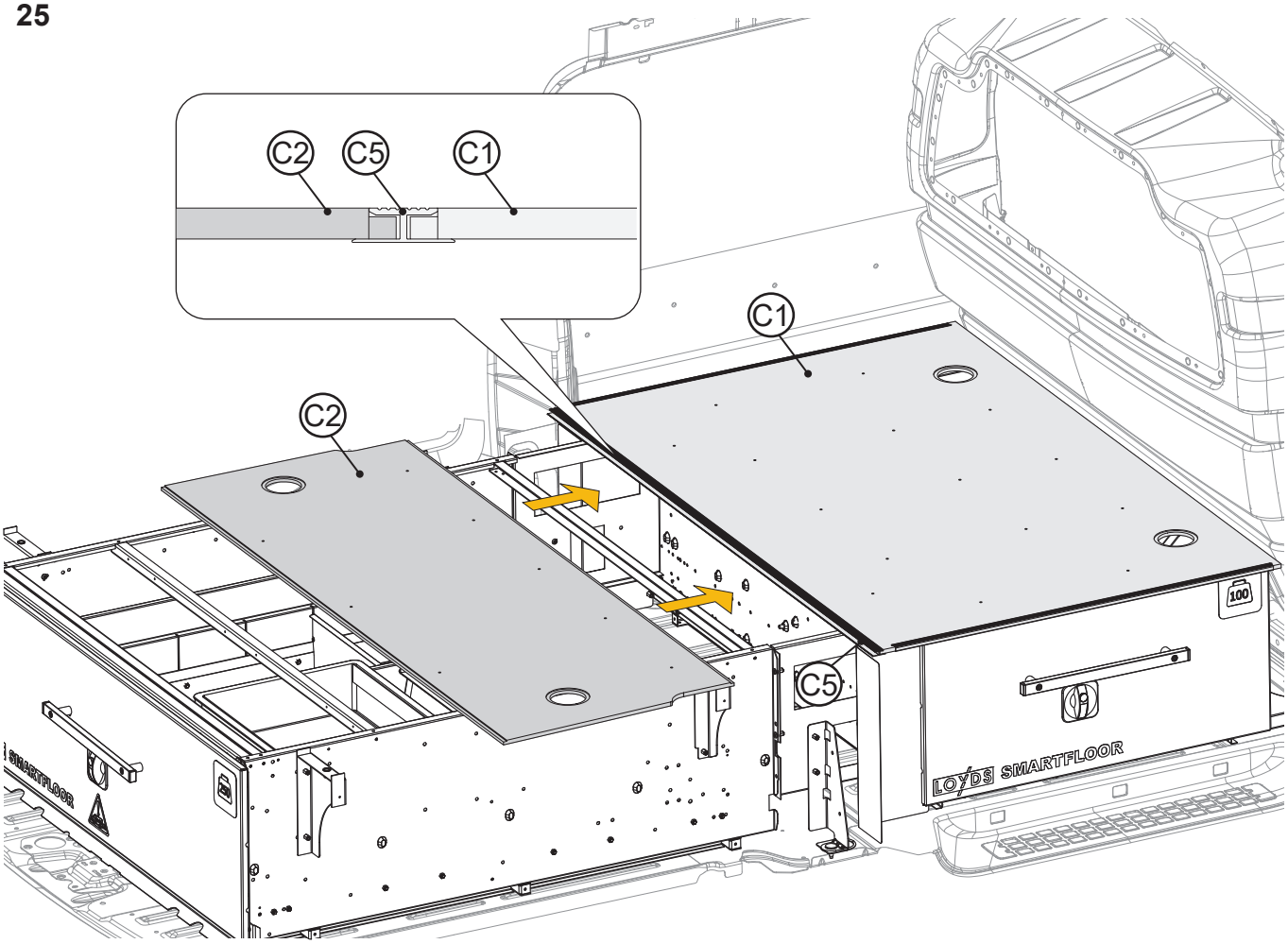
C2
C5
C1
C1
C2
C5
100
LOYDS SMARTFLOOR
SMARTFLOOR

**26**

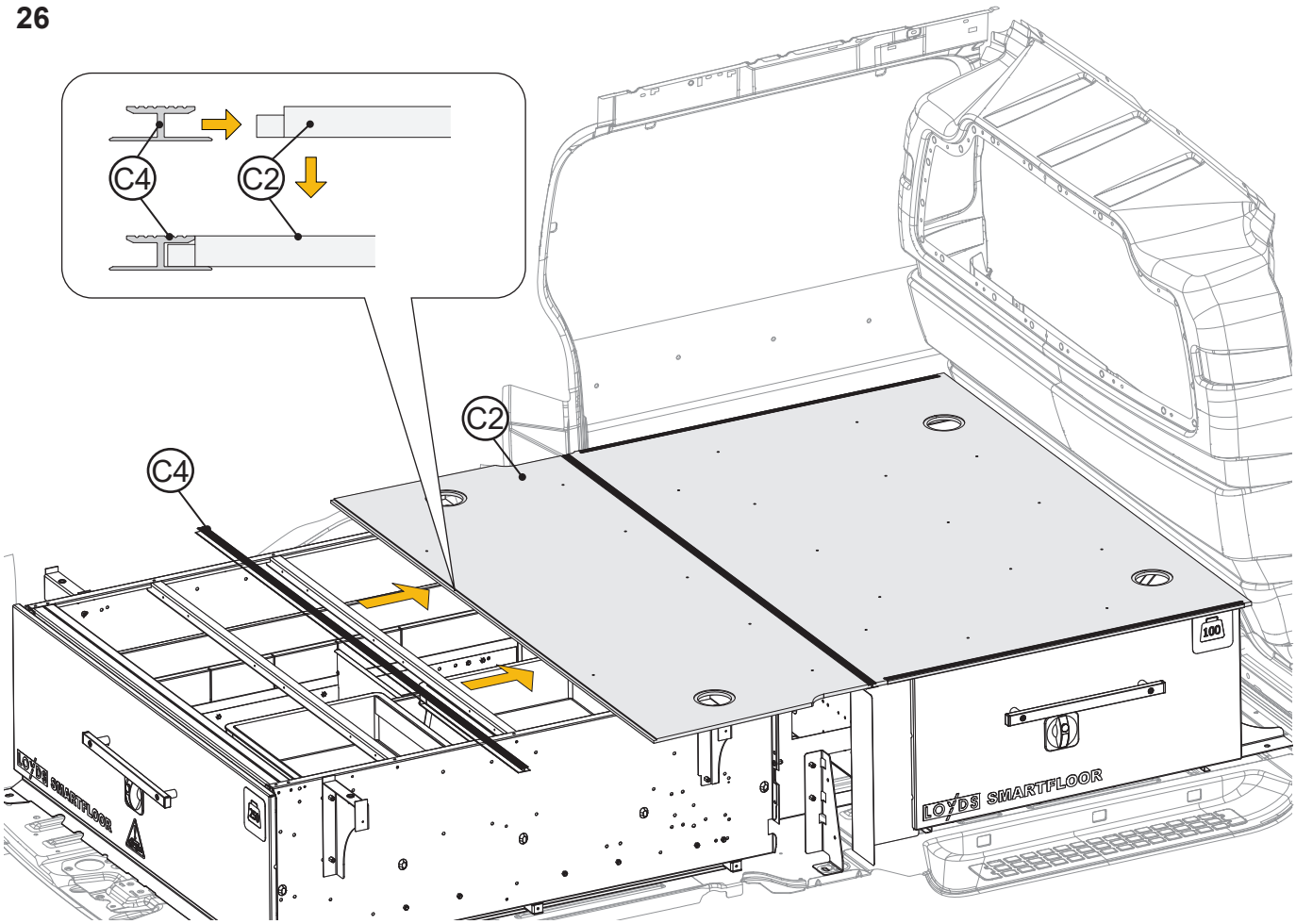
C4
C2
C2
C4
100
LOYDS SMARTFLOOR
LOYDS SMARTFLOOR

27

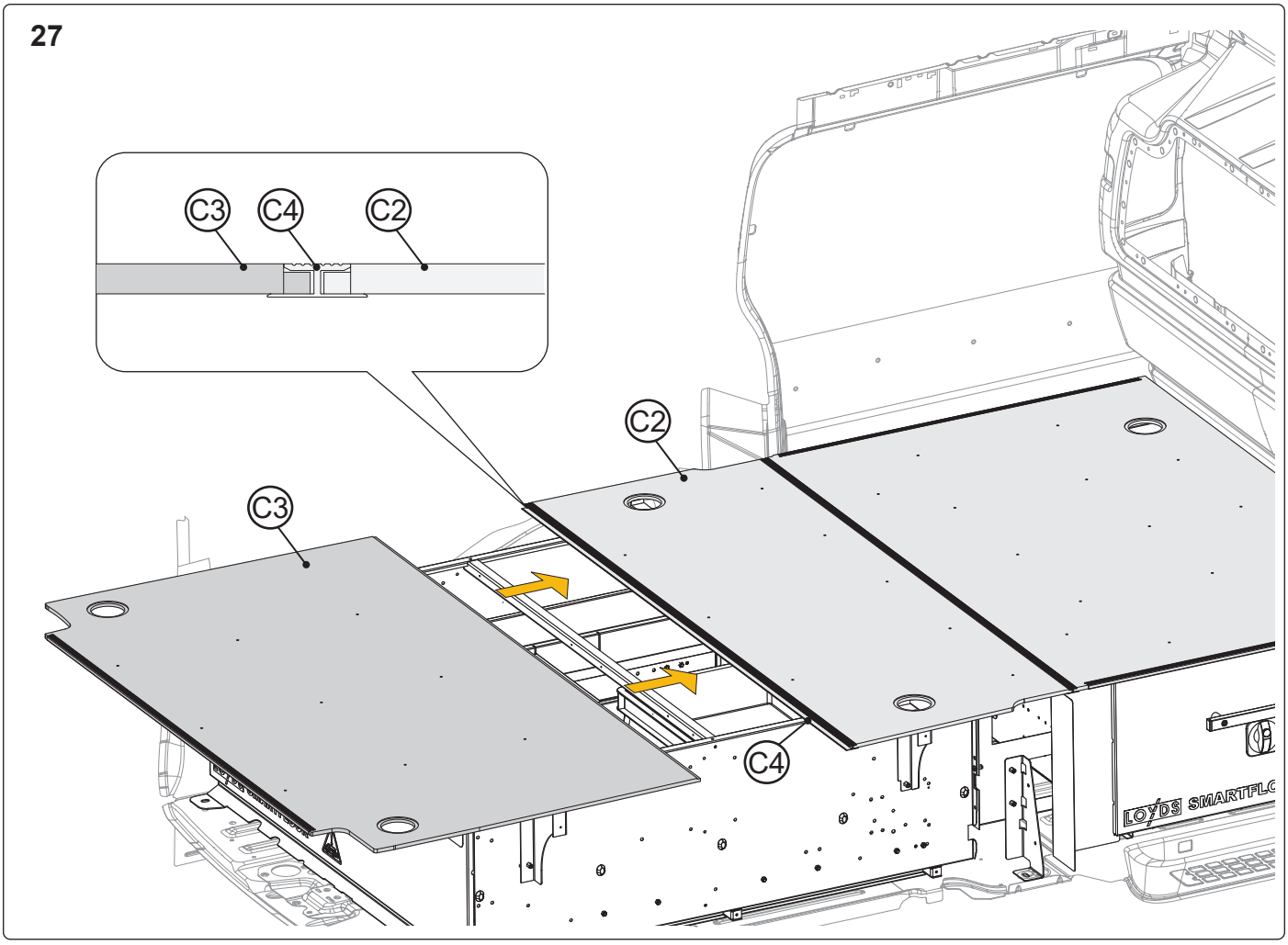
C3
C4
C2
C2
C3
C4
LOYDS SMARTFLO

28

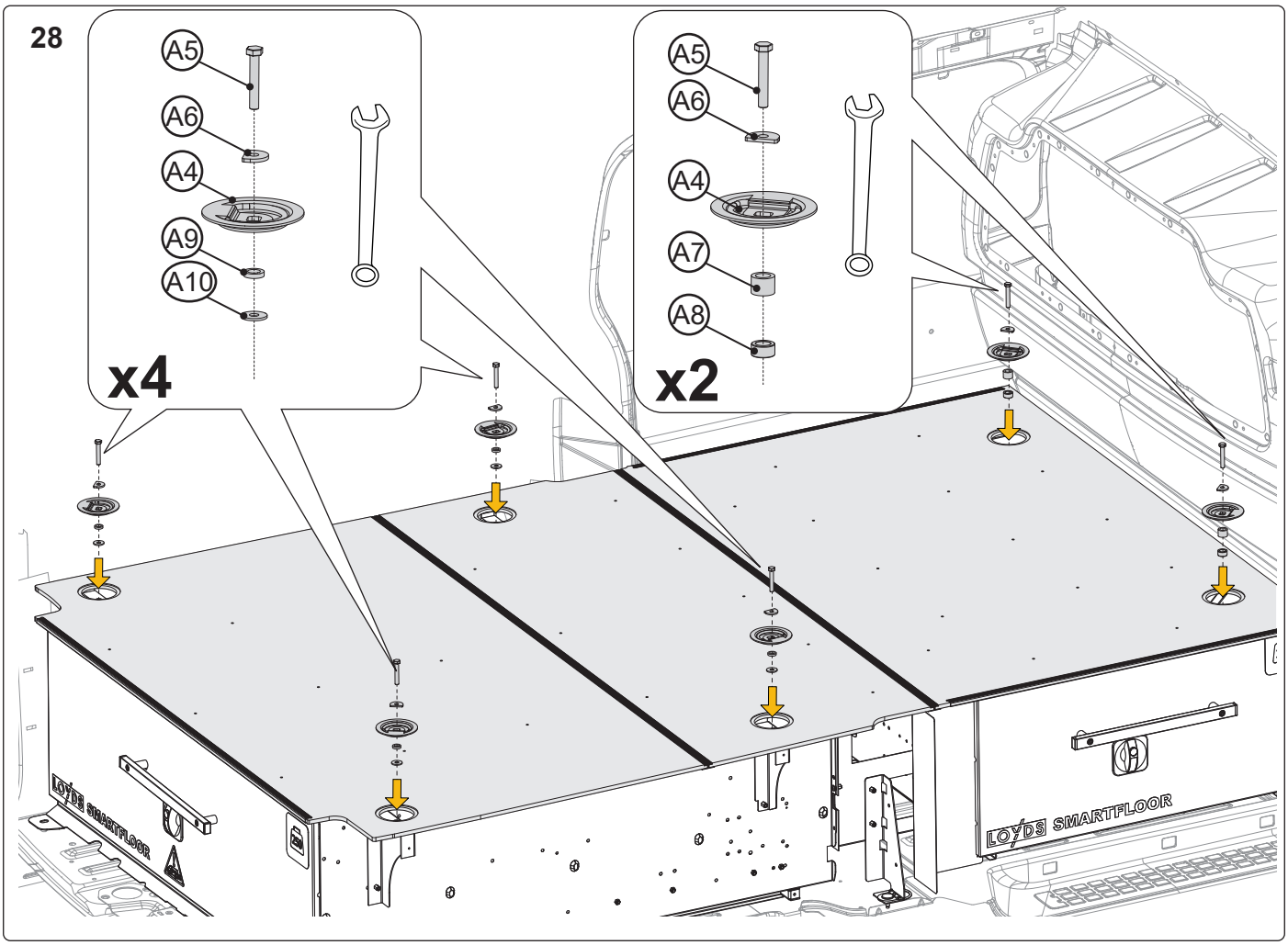
A5
A6
A4
A9
A10
x4
A5
A6
A4
A7
A8
x2
LOYDS SMARTFLOOR
LOYDS SMARTFLOOR

29

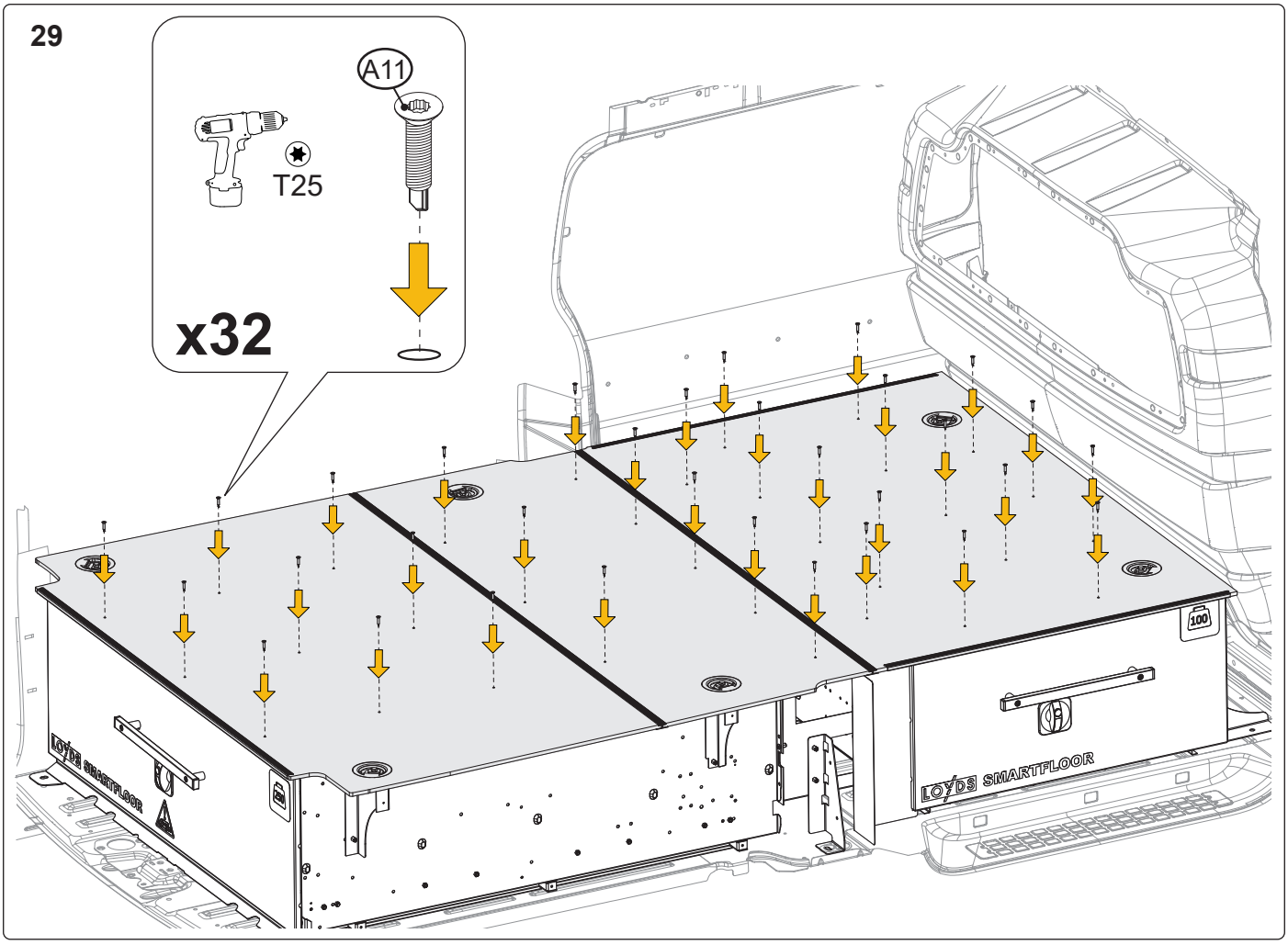
A11
T25
x32
LOYDS SMARTFLOOR
LOYDS SMARTFLOOR
100

30

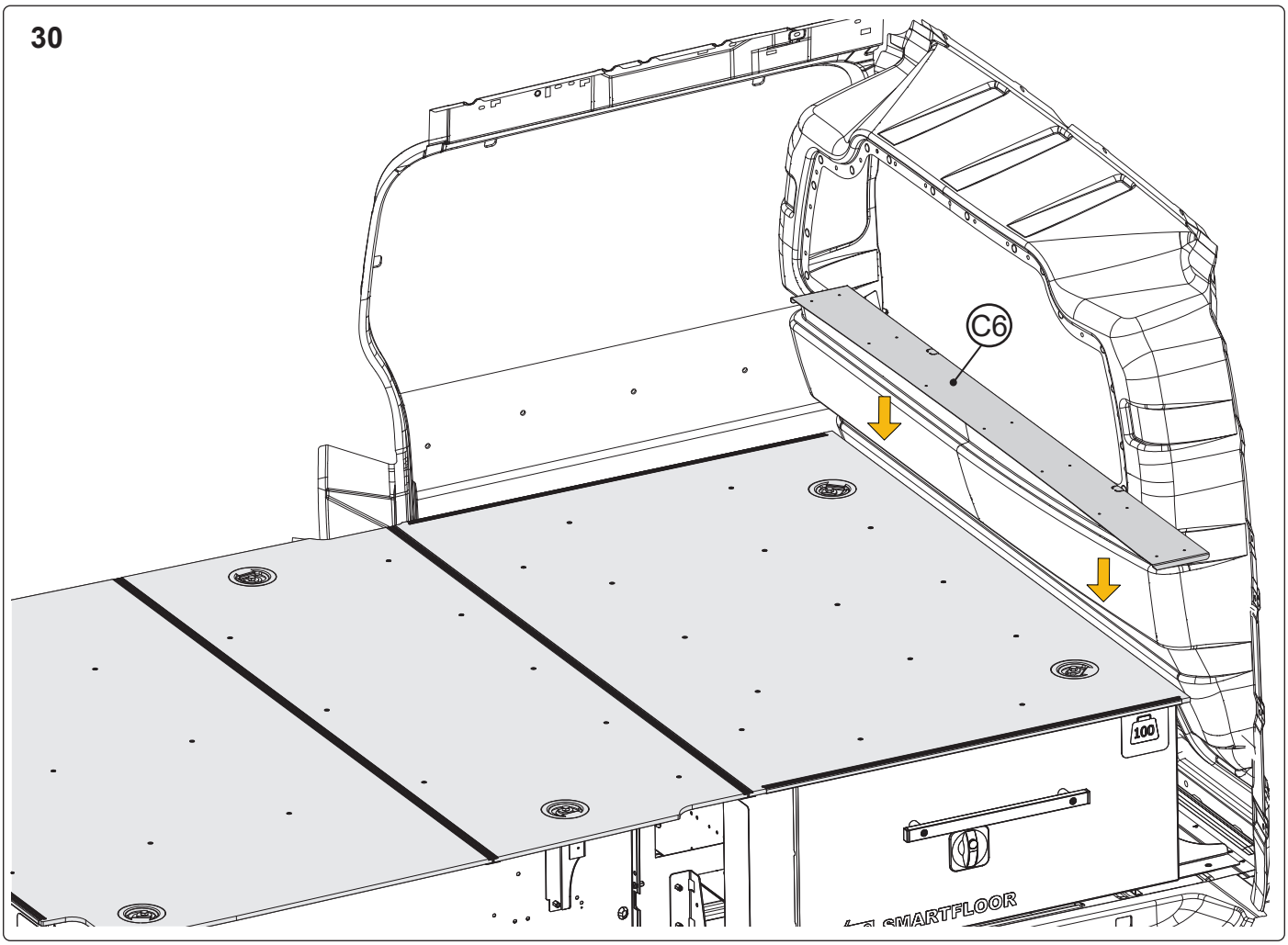
C6
SMARTFLOOR
100

31

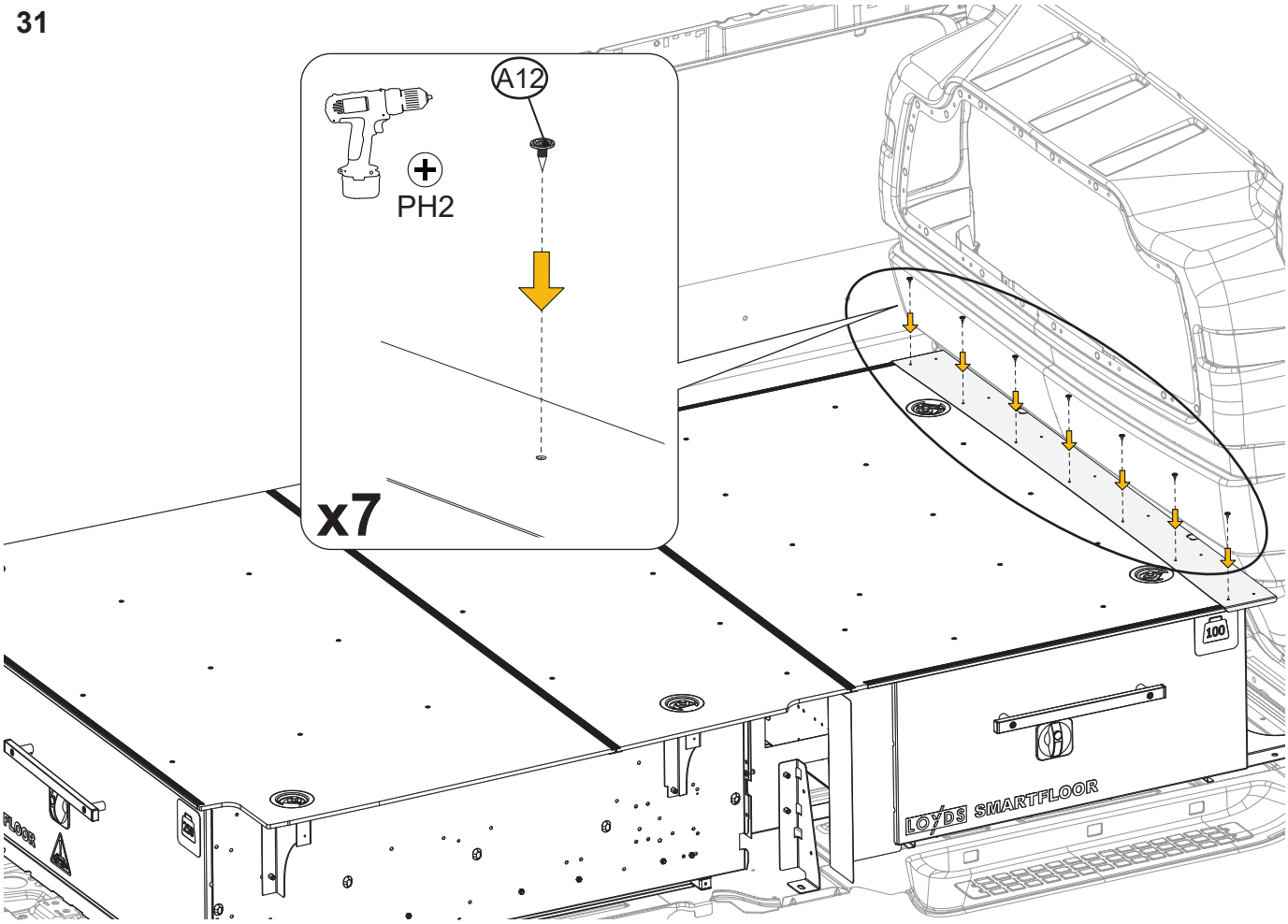
A12
PH2
x7
100
LOYDS SMARTFLOOR

32

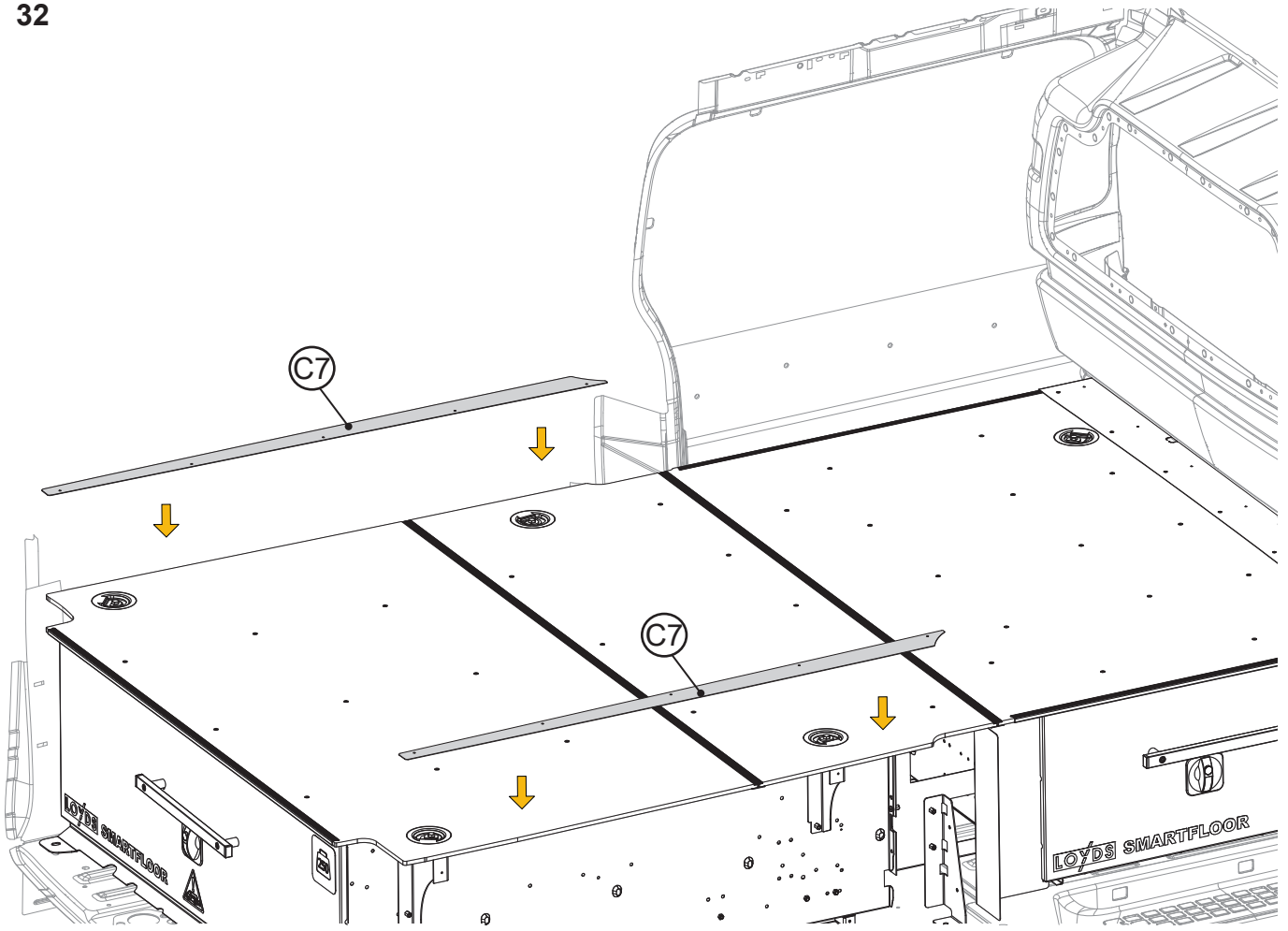
C7
C7
LOYDS SMARTFLOOR
LOYDS SMARTFLOOR

33

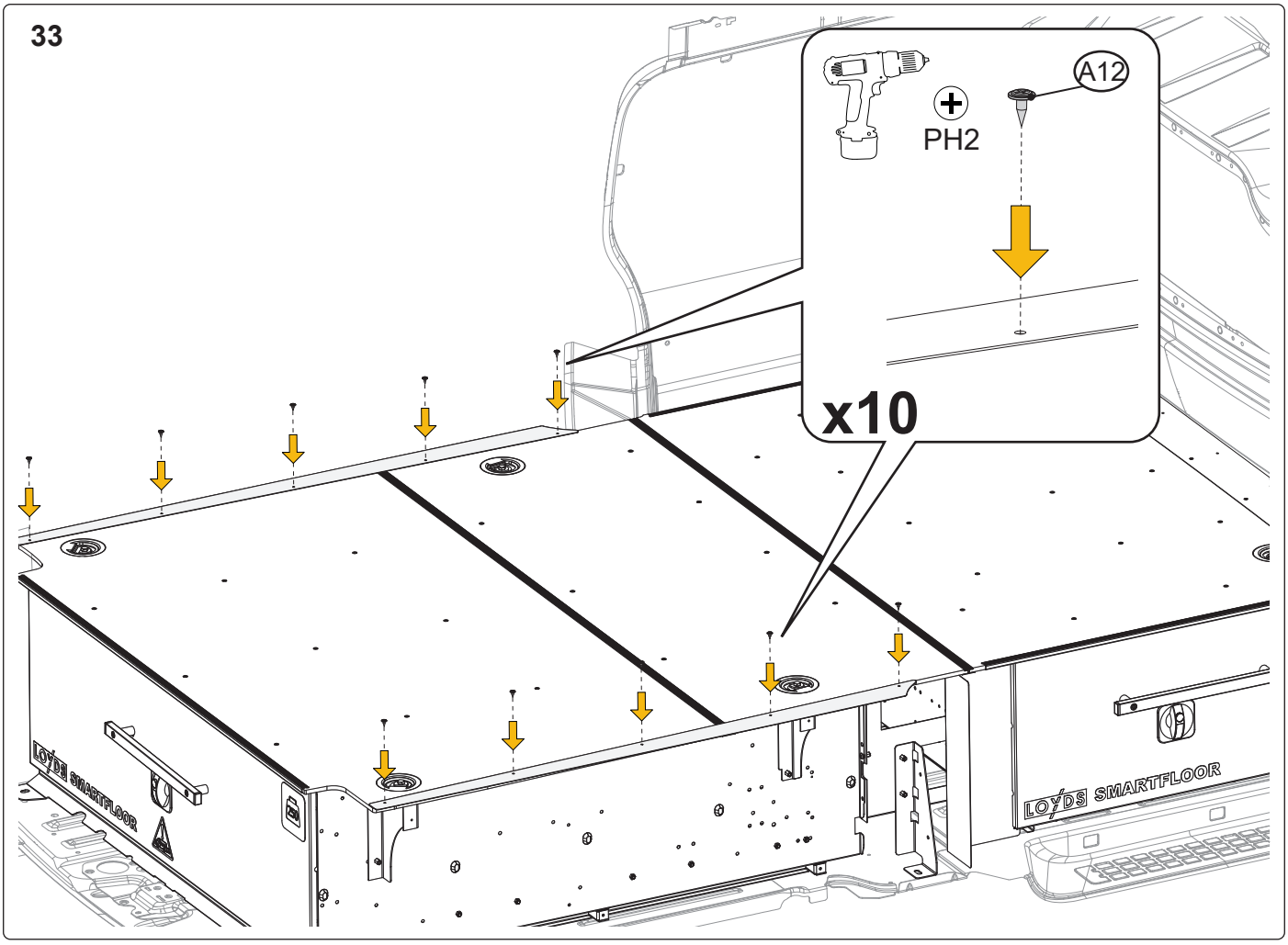
A12
PH2
x10
LOYDS SMARTFLOOR
LOYDS SMARTFLOOR

34

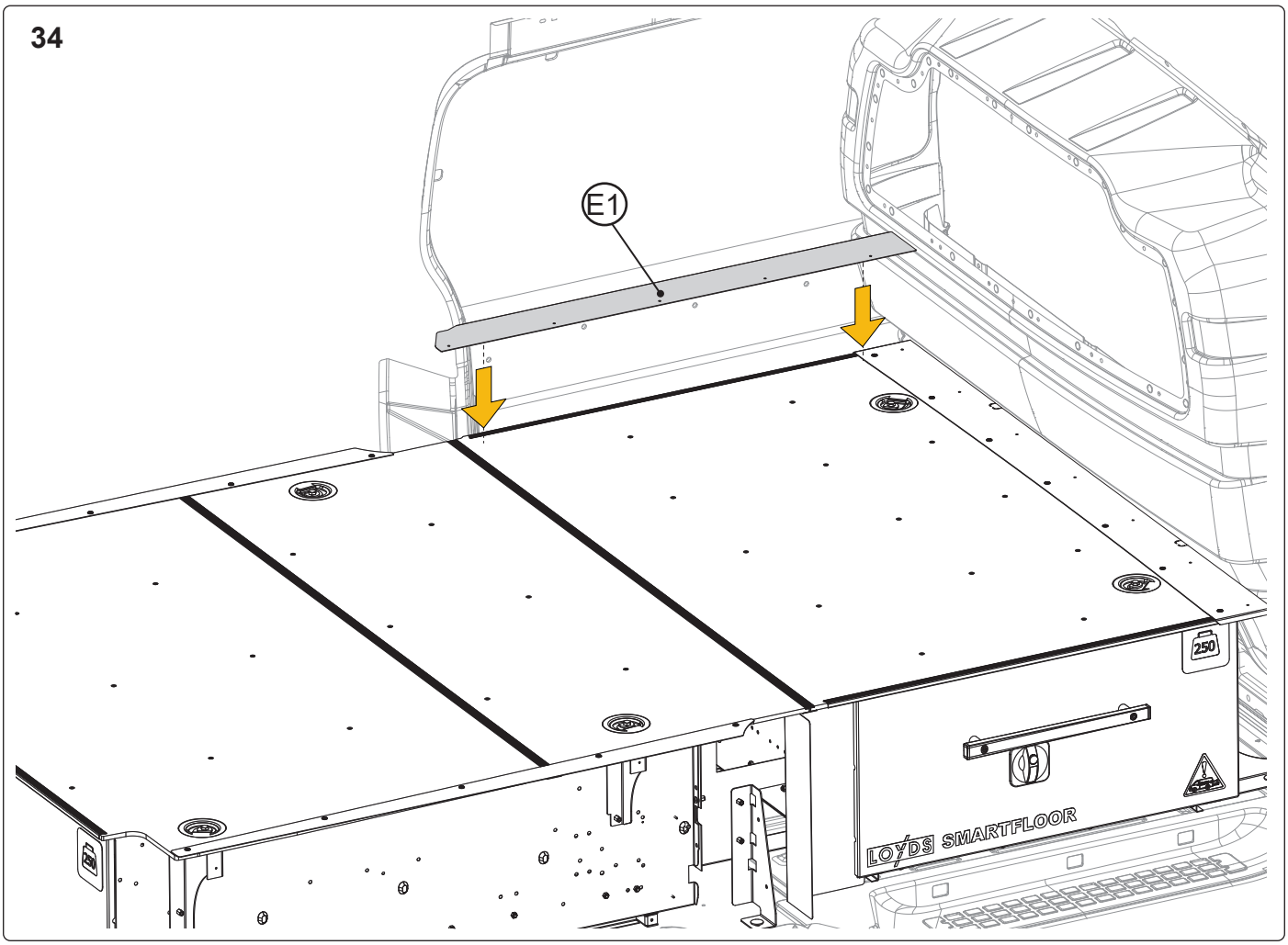
E1
250
LOYDS SMARTFLOOR

35

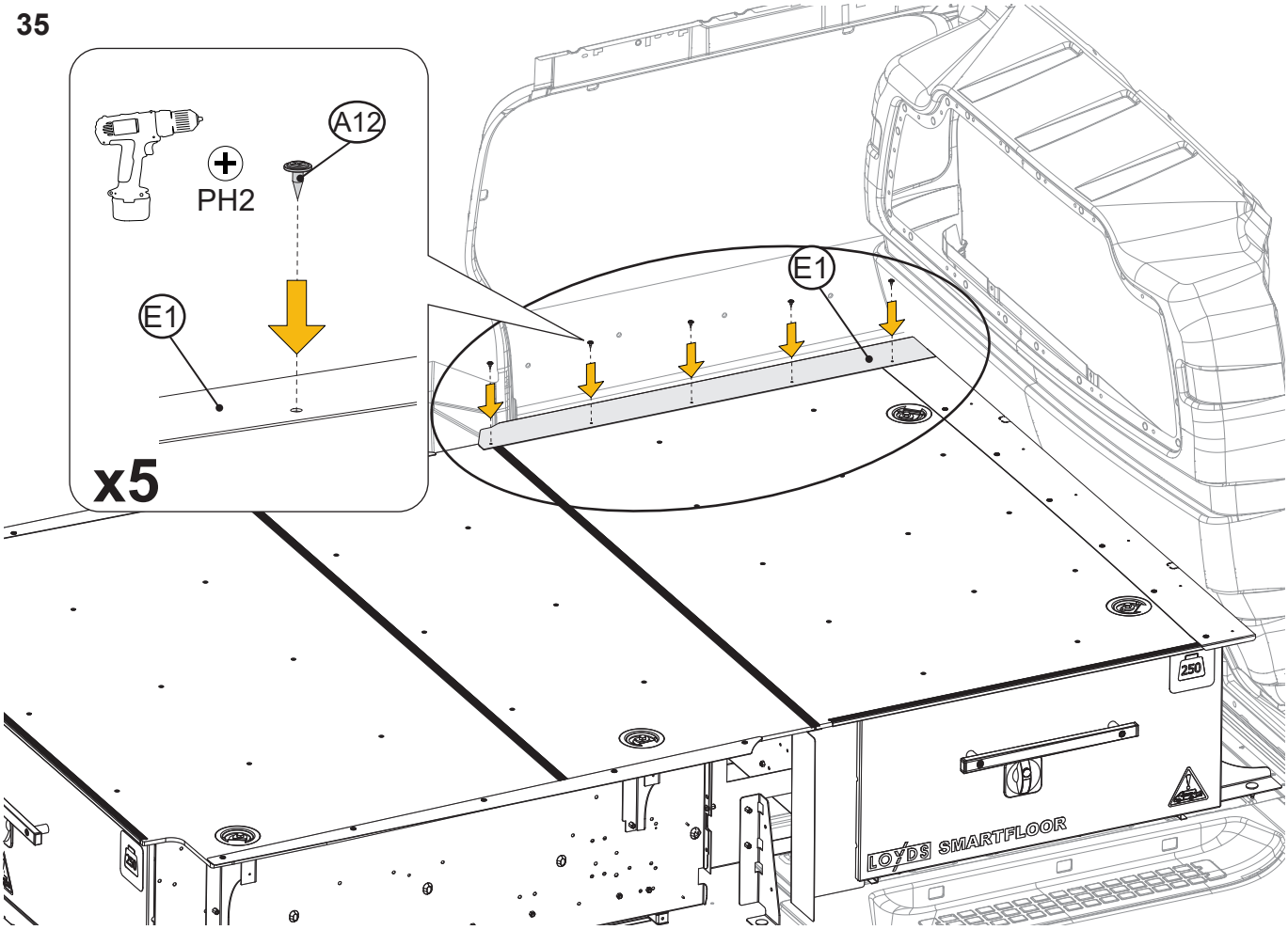
A12
PH2
E1
x5
E1
250
LOYDS SMARTFLOOR

36

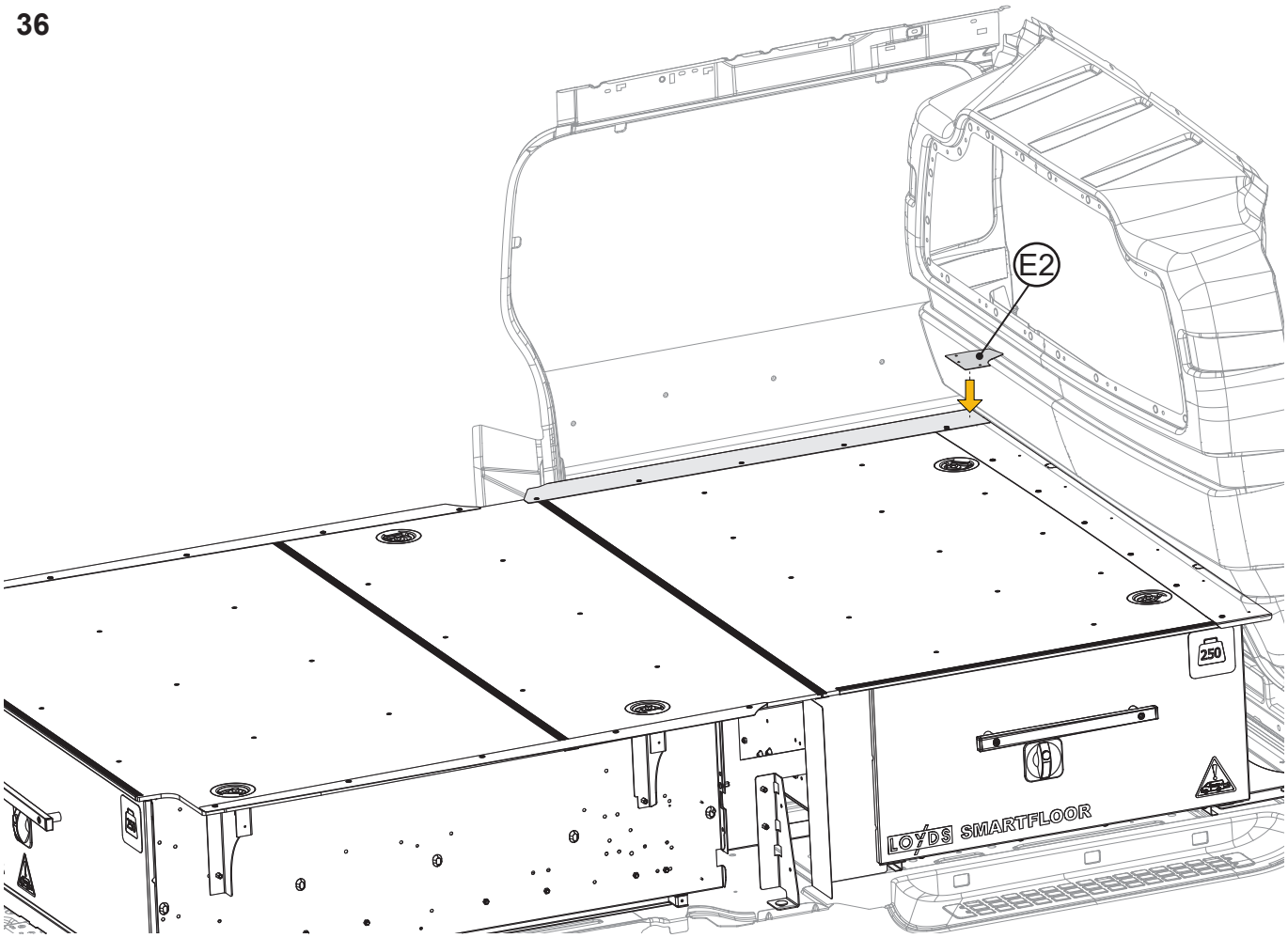
E2
250
LOYDS SMARTFLOOR

37

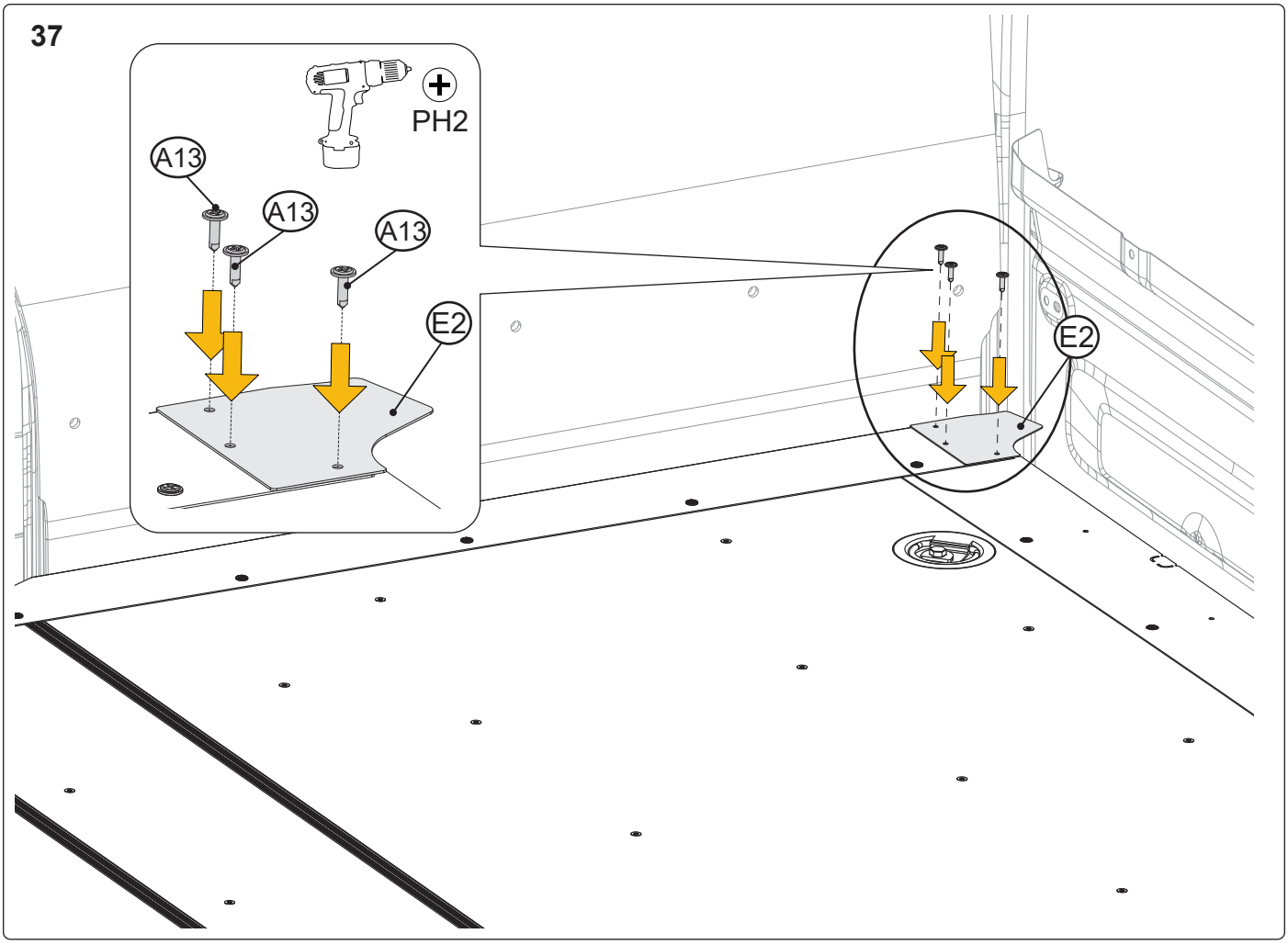
PH2
A13
A13
A13
E2
E2

38

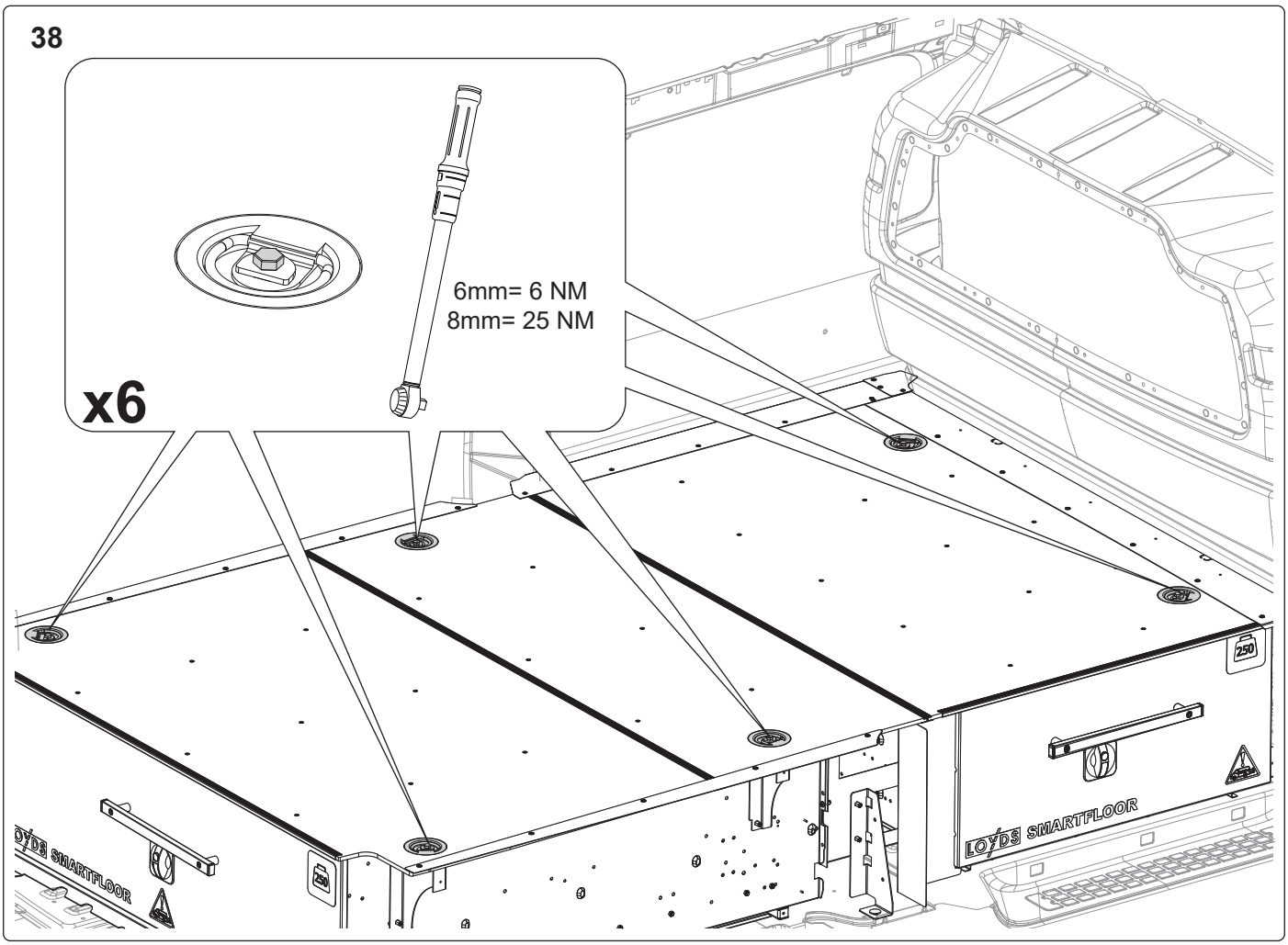
6mm= 6 NM
8mm= 25 NM
x6
LOYDS SMARTFLOOR
LOYDS SMARTFLOOR