Proace, Expert, Jumpy, Scudo, Vivaro

Smartfloor Kit Complete Short L1 L2 1SLD

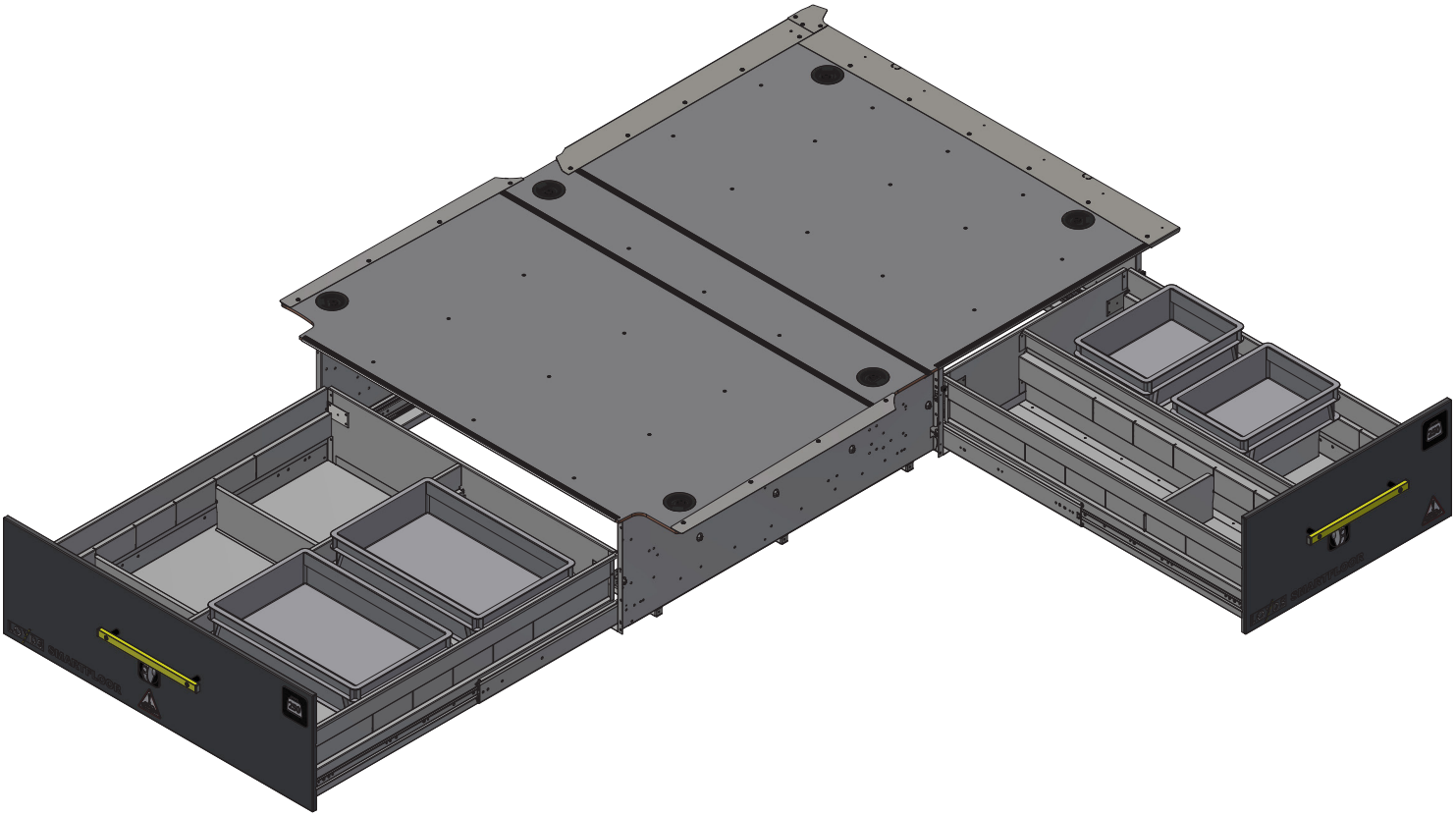

Installation Manual 15028920_B

Loyds Industri AS - 2026-02-09

LOYDS

Revision Record

Rev nr	Date	Page	Picture	Update	New	Deleted steps
A	2025-11-11				X	
B	2026-02-09	2		Added compatible cars		

Compatible cars

Toyota Proace from 2016
Peugeot Expert from 2016
Citroën Jumpy from 2016
Opel Vivaro from 2019
Fiat Scudo from 2024

Use colors when printing this installation manual. / Ved utskrift, bruk farger.

Tools

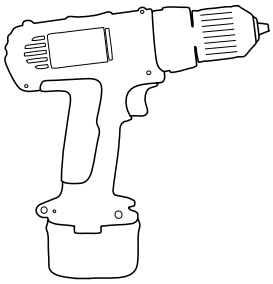

T25
T30

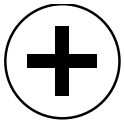

PH2

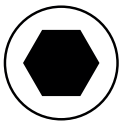

6 mm

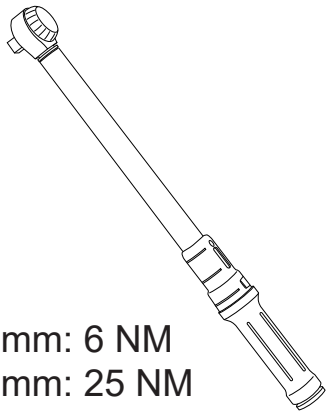

6 mm: 6 NM
8 mm: 25 NM

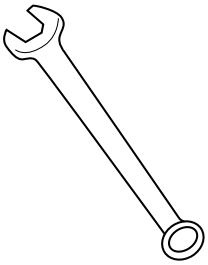

13 mm

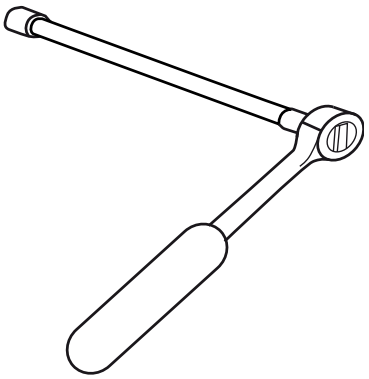

15024416 Kit Complete L1 L2 1SLD PEJ SF2020

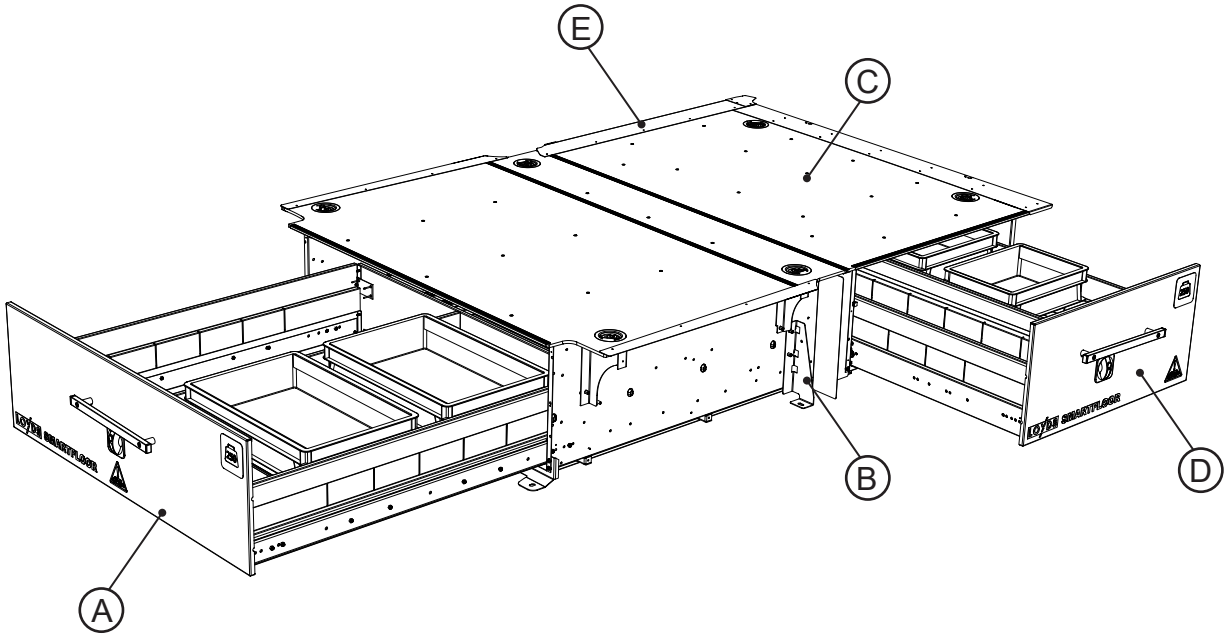

Number	Quantity	Part Number	Definition
A	1	15022501	Rear Drawer RD W1140 L1200
B	1	15024407	Steelbracket Set L1 L2 PEJ SF2020
C	1	15024405	Floor Set L1 L2 PEJ SF2020
D	1	15021294	Front Drawer FD1 W770 L1200 Main ASSY
E	1	15018478	Supplement Bracket Set 1SLD PEJ ASSY SE

15024407 Steelbracket Set L1 L2 PEJ SF2020

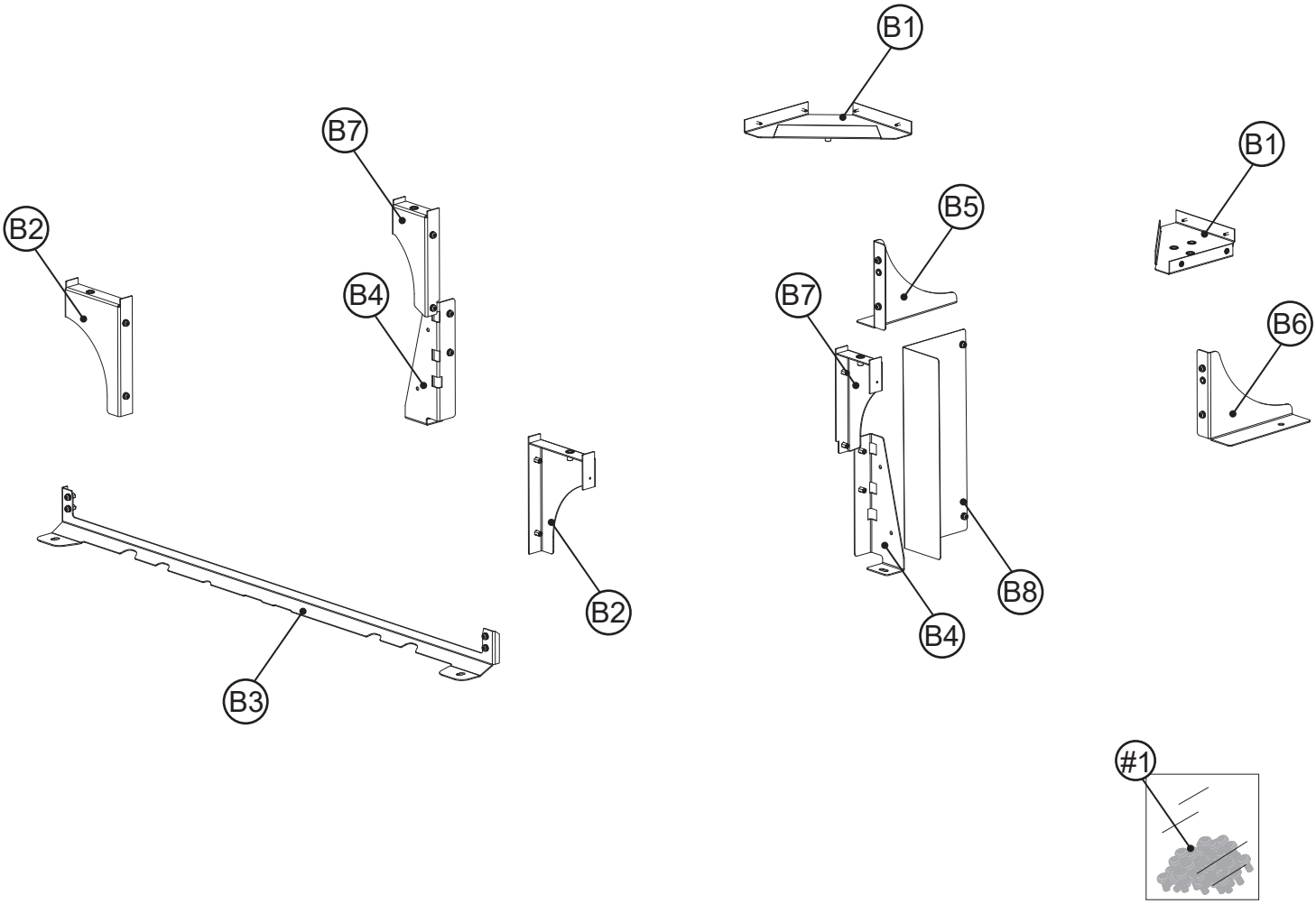

Number	Quantity	Part Number	Definition
B1	2	15018460	Bracket Latch Inner 8mm ASSY
B2	2	15018461	Bracket Latchcup Side M8 SF 2020 ASSY
B3	1	15021212	Bracket Lower Rear Middle PEJ2020 ASSY
B4	2	15021218	Bracket Middle PEJ2020 ASSY
B5	1	15021216	Bracket Front Left PEJ2020 ASSY
B6	1	15021215	Bracket Front Right PEJ2020 ASSY
B7	2	15021233	Bracket Latchcup Side M8 Narrow ASSY
B8	1	15024410	Cover Rear Slide Door PEJ SF2020 ASSY
#1	1	15024406	Fitting Kit Steelbracket Set L1 L2 PEJ SF2020

15024405 Floor Set L1 L2 PEJ SF2020

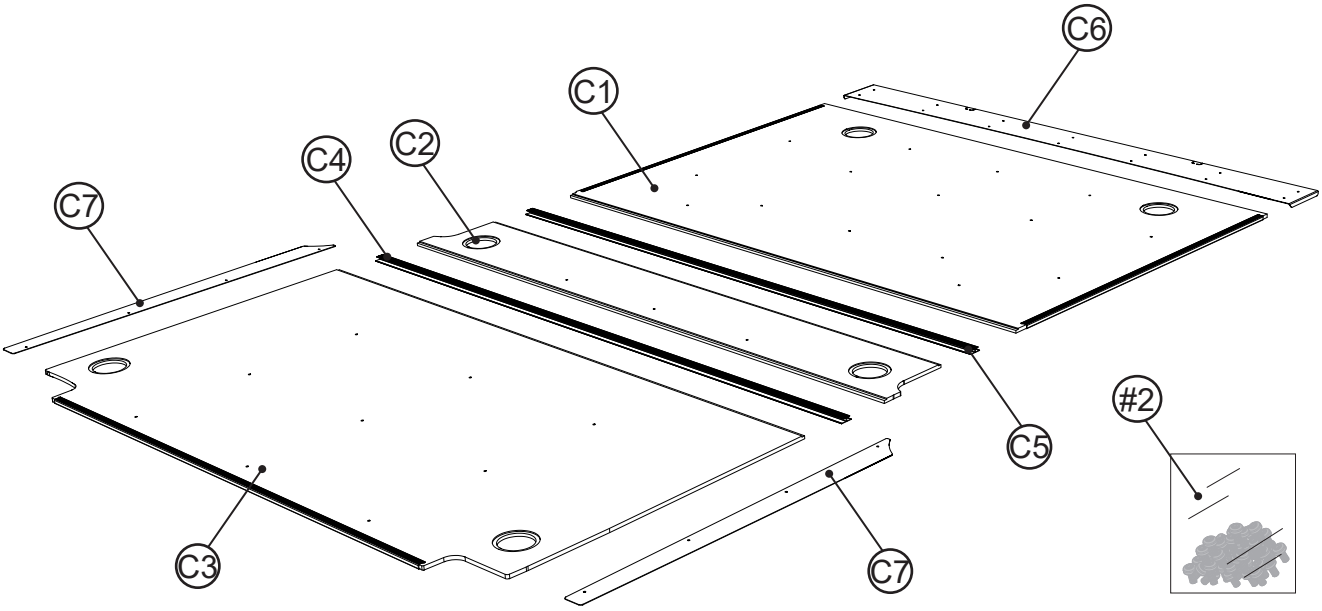

Number	Quantity	Part Number	Definition
C1	1	15024402	Floor Front L1 L2 L3 PEJ SF2020 ASSY
C2	1	15021234	Floor Middle L1 L2 PEJ2020
C3	1	15024403	Floor Rear L1 L2 L3 PEJ SF2020 ASSY
C4	1	15024397	H-profile 9mm L=1550
C5	1	15024398	H-profile 9mm L=1475
C6	1	15021239	Floor Extend Bracket PEJ2020
C7	2	15024395	Floor Extend Bracket Rear Side L1 L2 PEJ SF2020
#2	1	15024404	Fitting Kit Floor Set L1 L2 PEJ SF2020

15018478 Supplement Bracket Set 1SLD PEJ ASSY SE

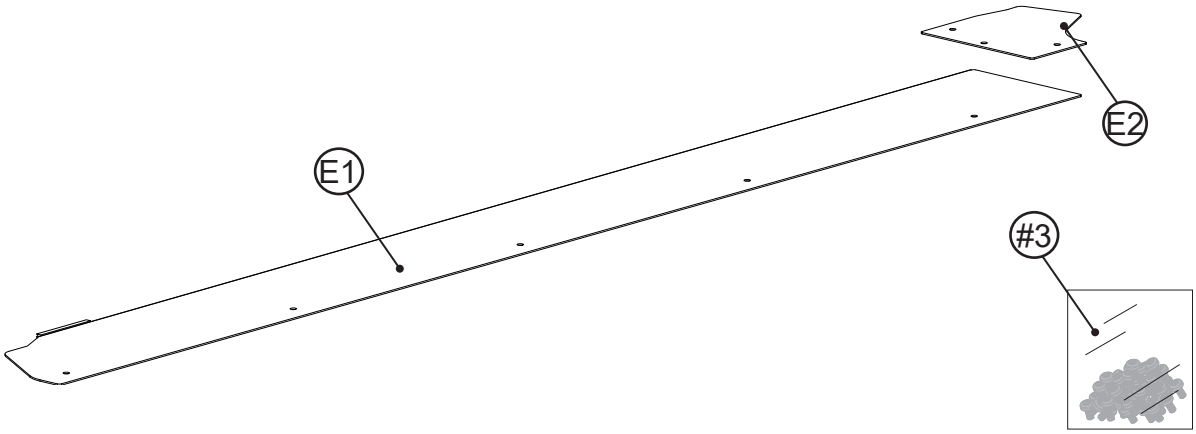

Number	Quantity	Part Number	Definition
E1	1	15018476	Supplement Floor 1SLD PEJ
E2	1	15018477	Floor Supplement 1SLD Orig Sep PEJ
#3	1	15018479	Fitting Kit Suppl Bracket Floor 1SLD PEJ

2x 15010236 Handle Assy

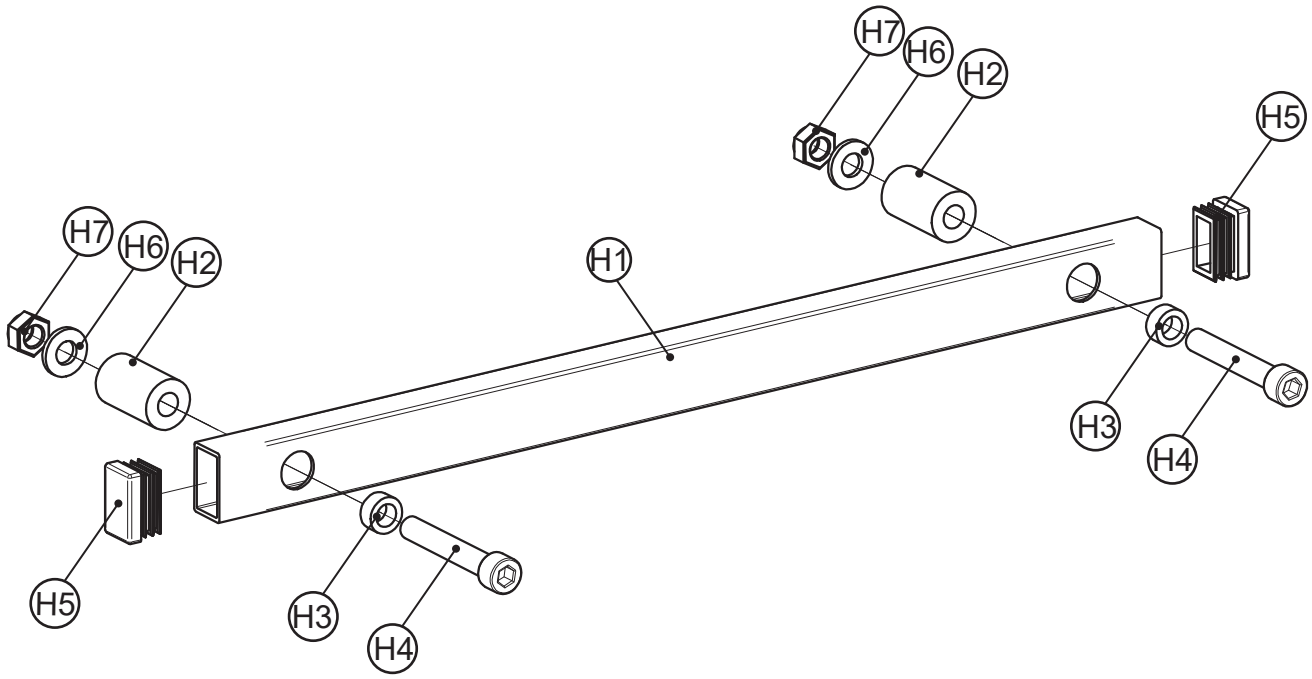

Number		Quantity	Part Number	Definition
H	H1	2	15009441	Handle Tube 25x15x286
	H2	2	15009443	Spacer Ø8,3x18x30 Nylon Black
	H3	2	15009443	Spacer Ø8,1x13x6mm Galv
	H4	2	15009444	Screw M8x50 Cylinderh Hex
	H5	2	15009438	End sleeve Black
	H6	2	8,4x17x2	M8 Washer, DIN 125
	H7	2	8 NMU	Mutter M8 Nyloc DIN985

#1 15024406 Fitting Kit Steelbracket Set L1 L2 PEJ SF2020

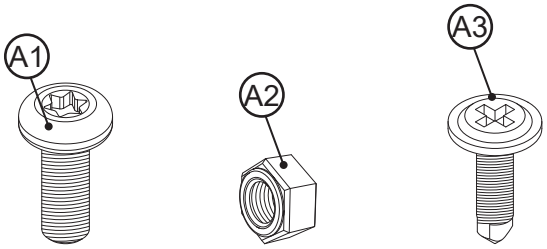

x28 **x4** **x8**

A1	15003551 M6x16 TX30 pan (DIN 7985)
A2	6 NMU M6 Self locking nut, DIN 985-8
A3	4,2x16 FL Screw Selfdrill flath elz

#2 15024404 Fitting Kit Floor Set L1 L2 PEJ SF2020

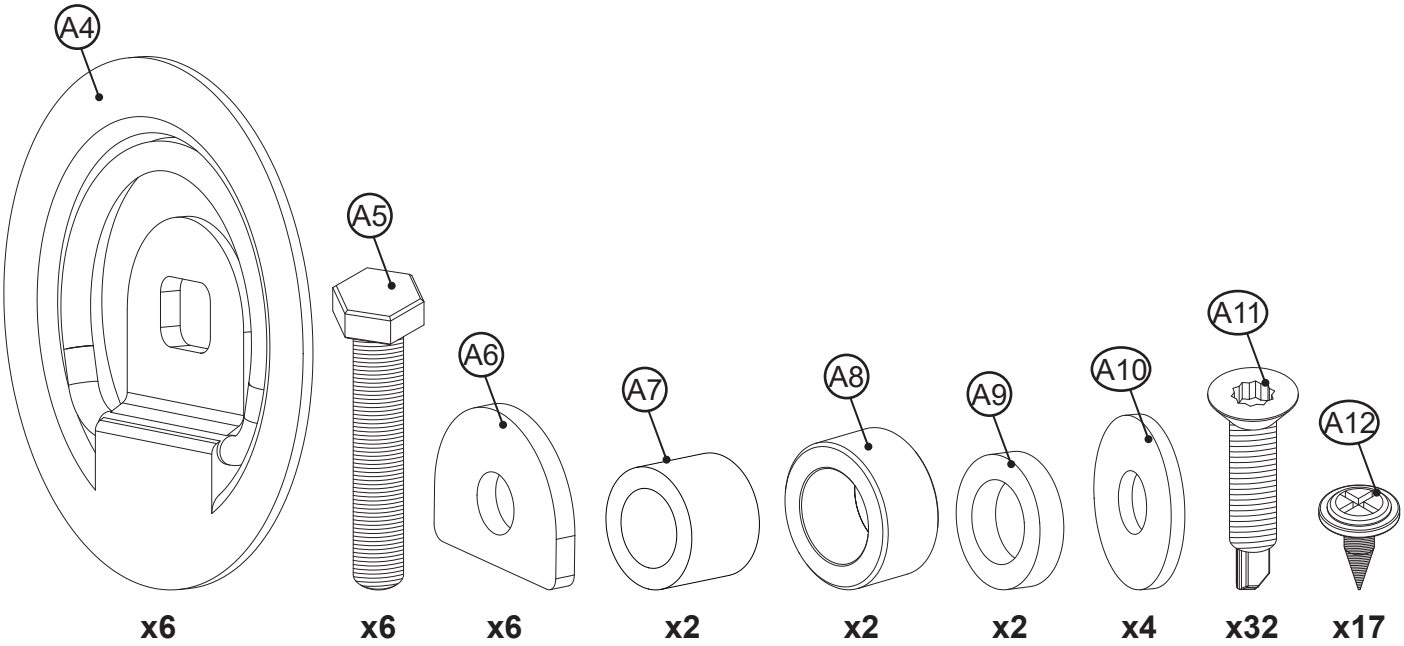

A4	15005497 Latch Cup Black Ø90 Ø12x15 1000Kp
A5	15004713 M8x50 screw, 6K DIN 933 Black, ElZn+Cr3
A6	15005884 Washer Latchcup for Ø8
A7	15001584 Distansehylse D20 d13 h15
A8	13x20x10 Spacer, U-710
A9	11,3x18x4mm Plastic Spacer B-219
A10	15004714 Washer 8,4x23x2mm DIN 9021 Black, ElZn+Cr3
A11	15016947 Screw 4,8x25 Selfdrill Counters EW25 Elz
A12	4,2x13 S Screw 4,2x13 Flathead Needle Black

#3 15018479 Fitting Kit Suppl Bracket Floor 1SLD PEJ

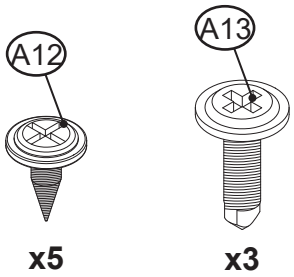

A12	4,2x13 S Screw 4,2x13 Flathead Needle Black
A13	4,2x16 FLS Platescrew selfdrilling E45759 Black

1

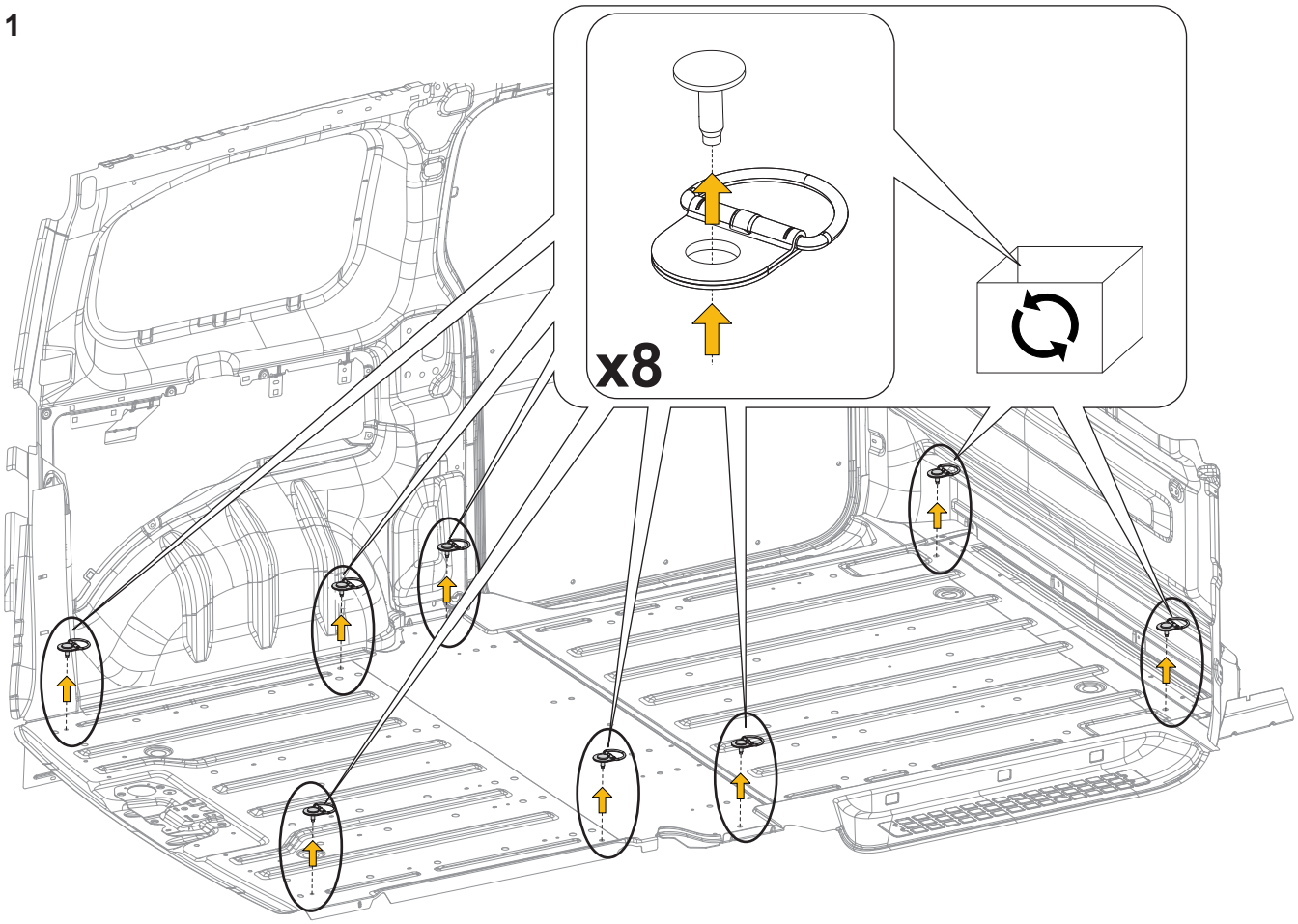

2

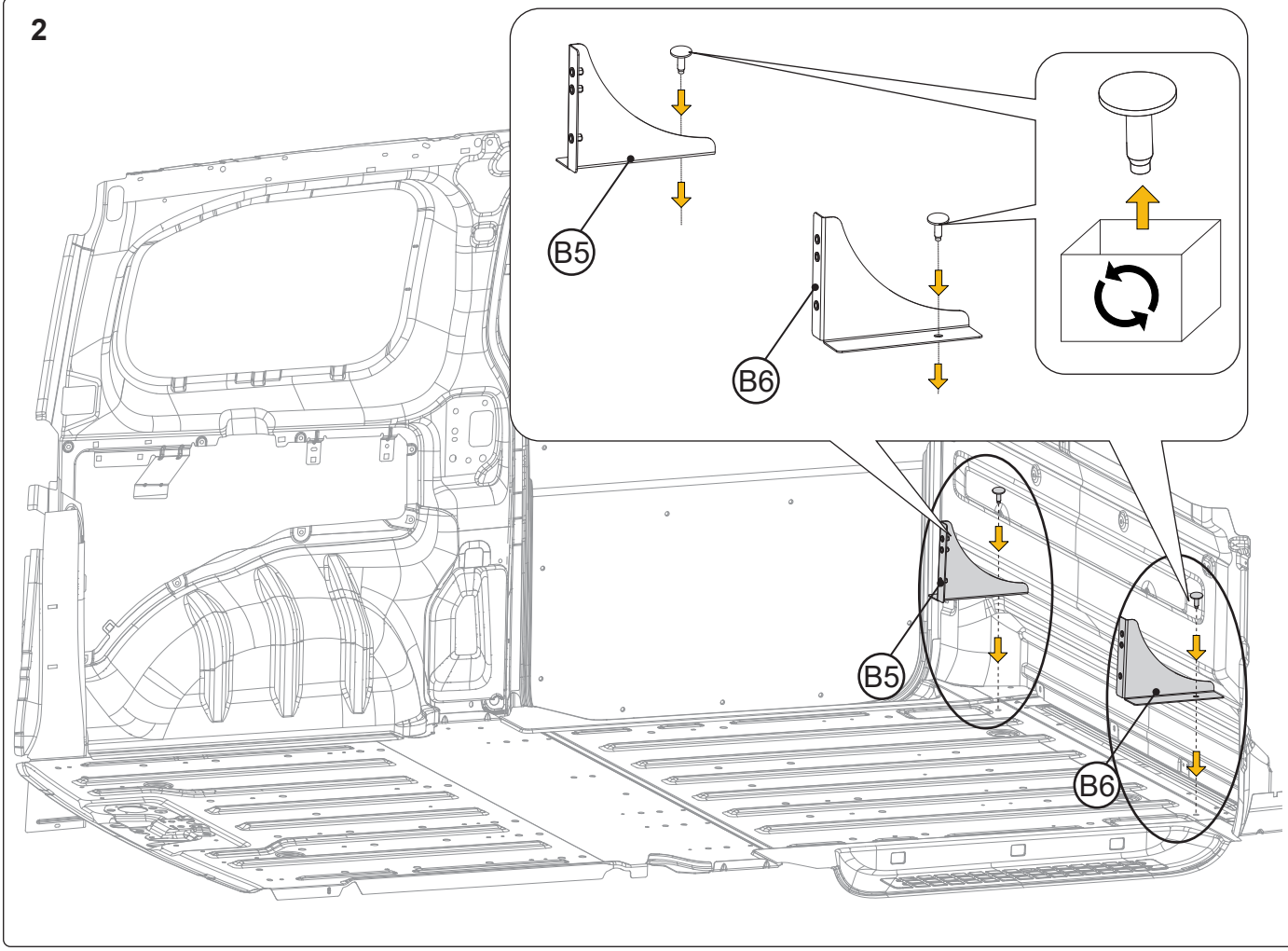

3

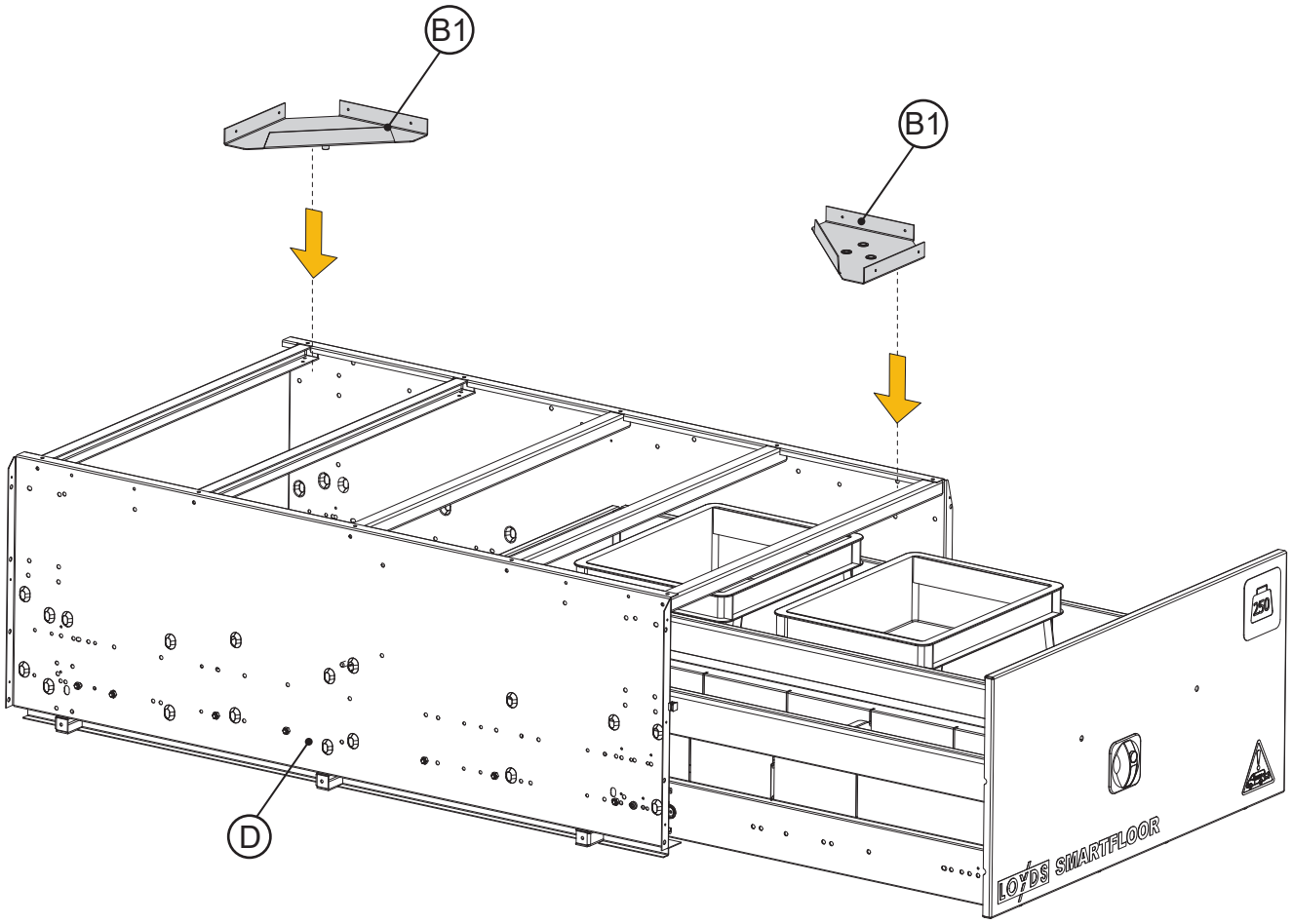
B1
B1
D
250
LOYDS SMARTFLOOR

4

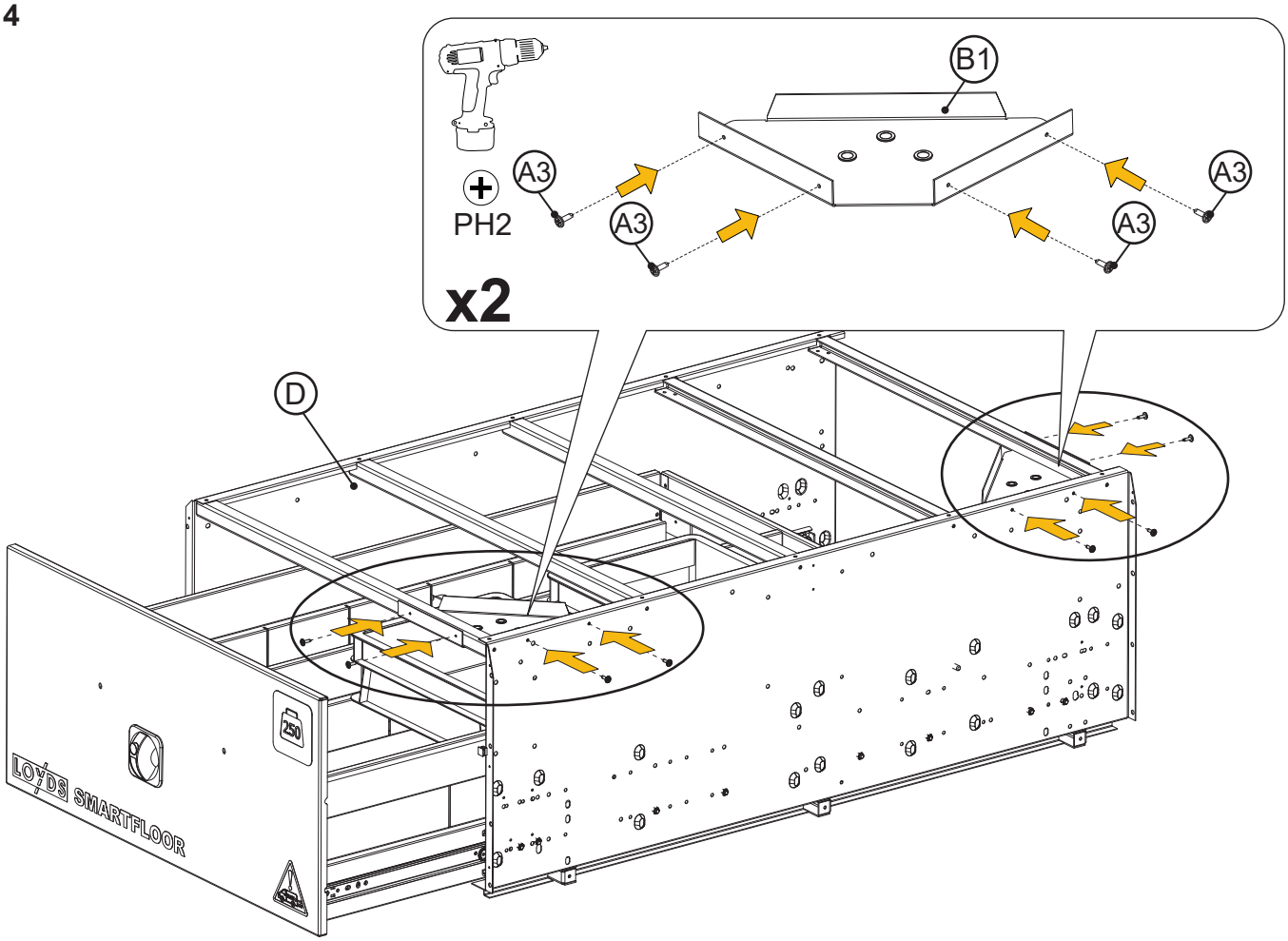
B1
A3
A3
A3
A3
PH2
x2
D
250
LOYDS SMARTFLOOR

5

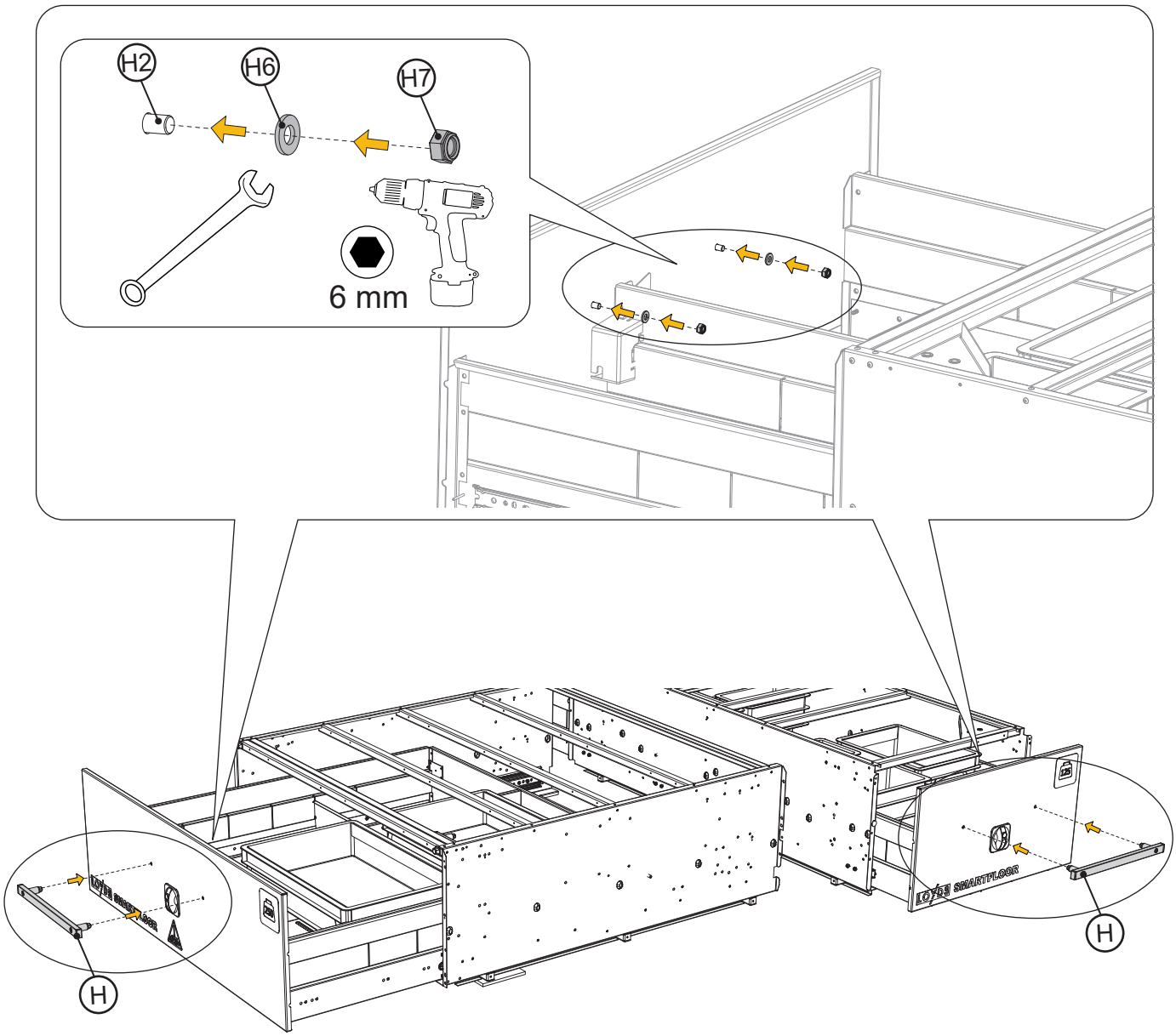

6

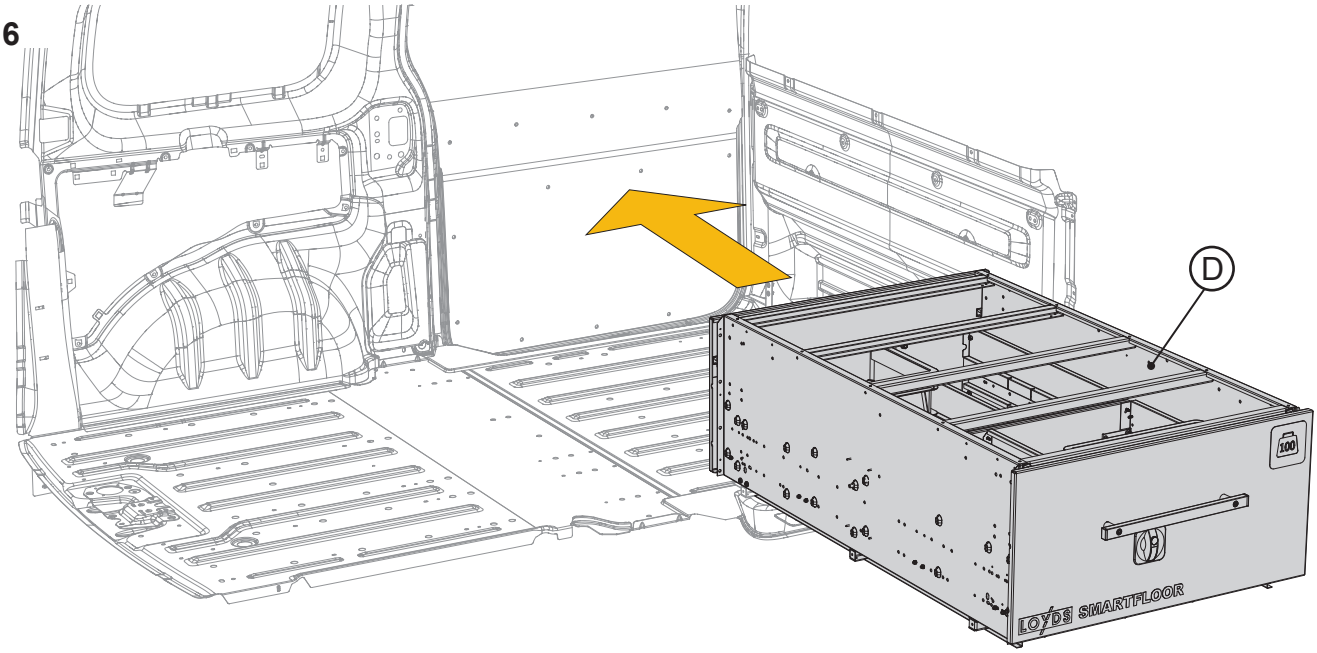

7

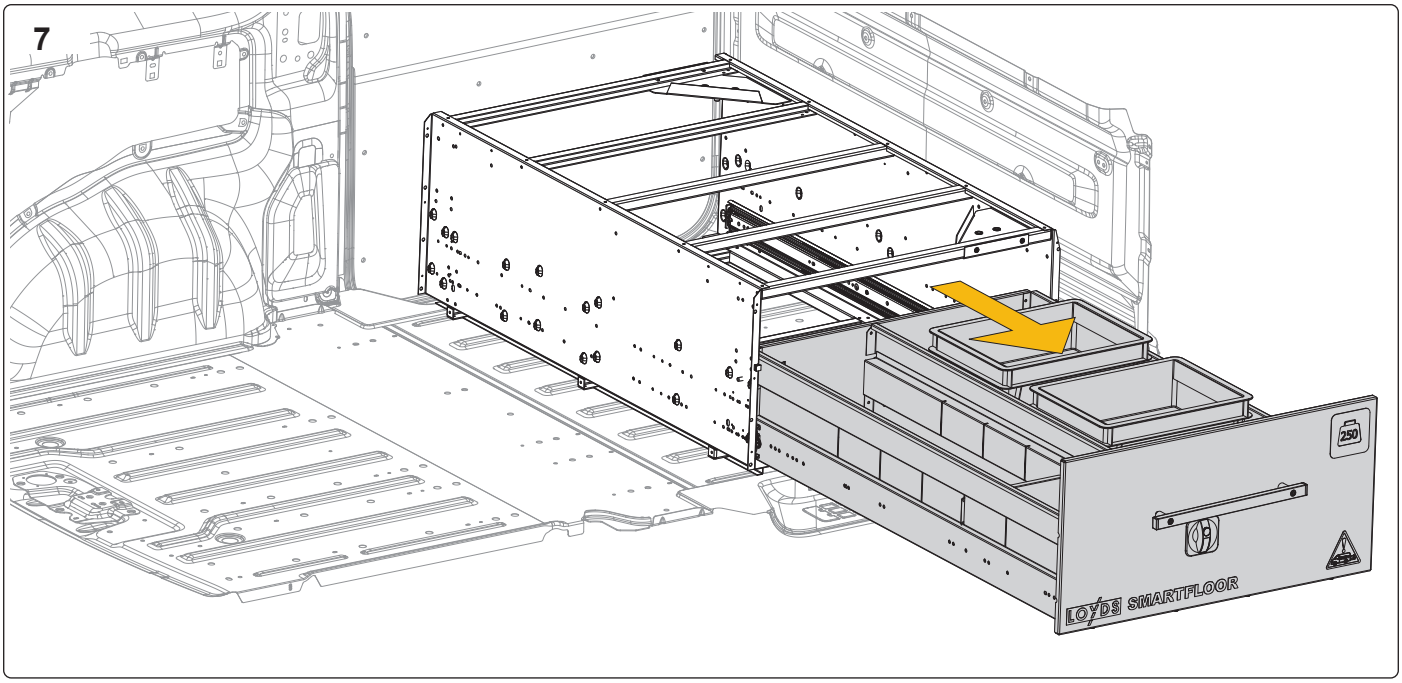

8

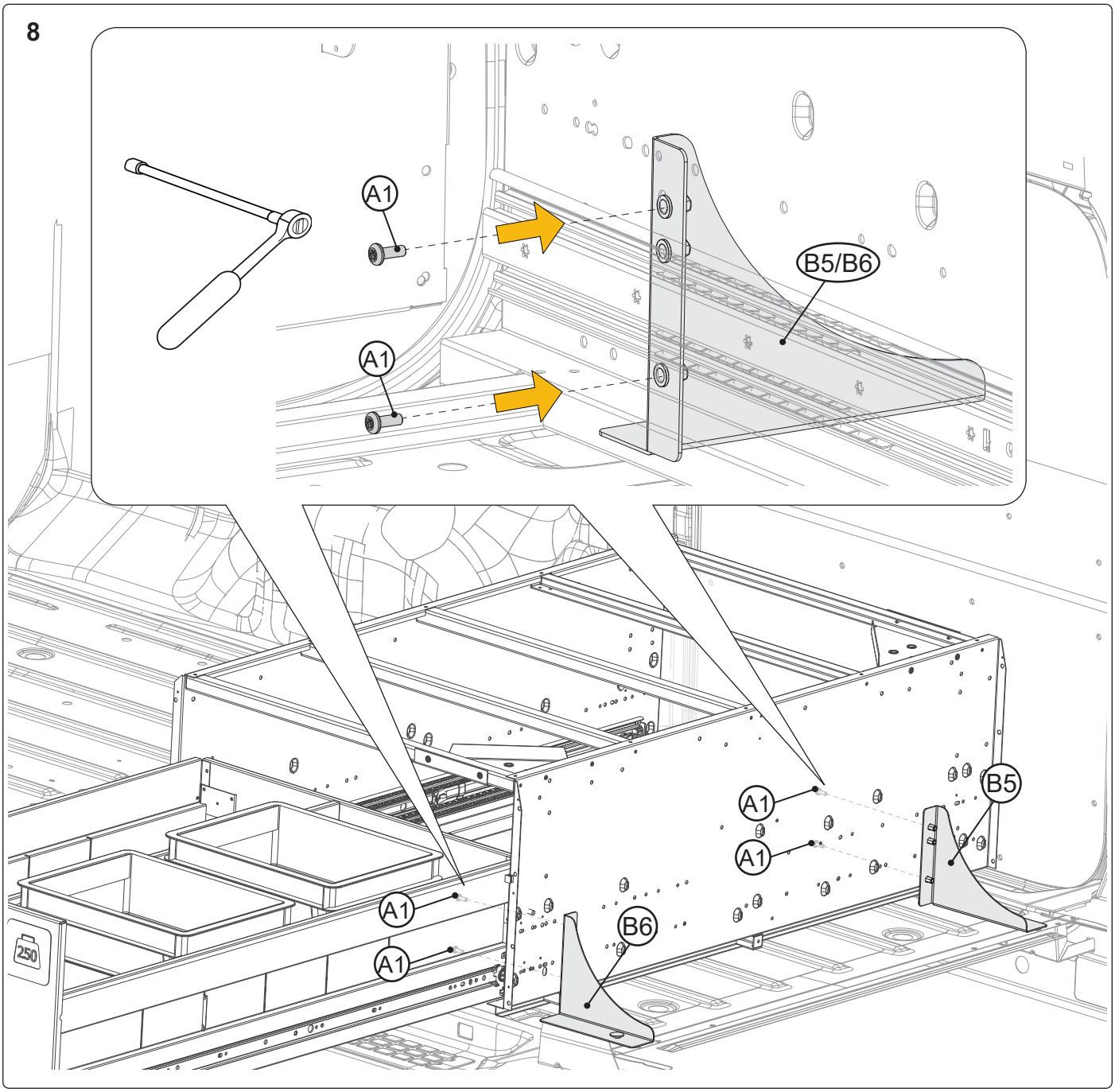

9

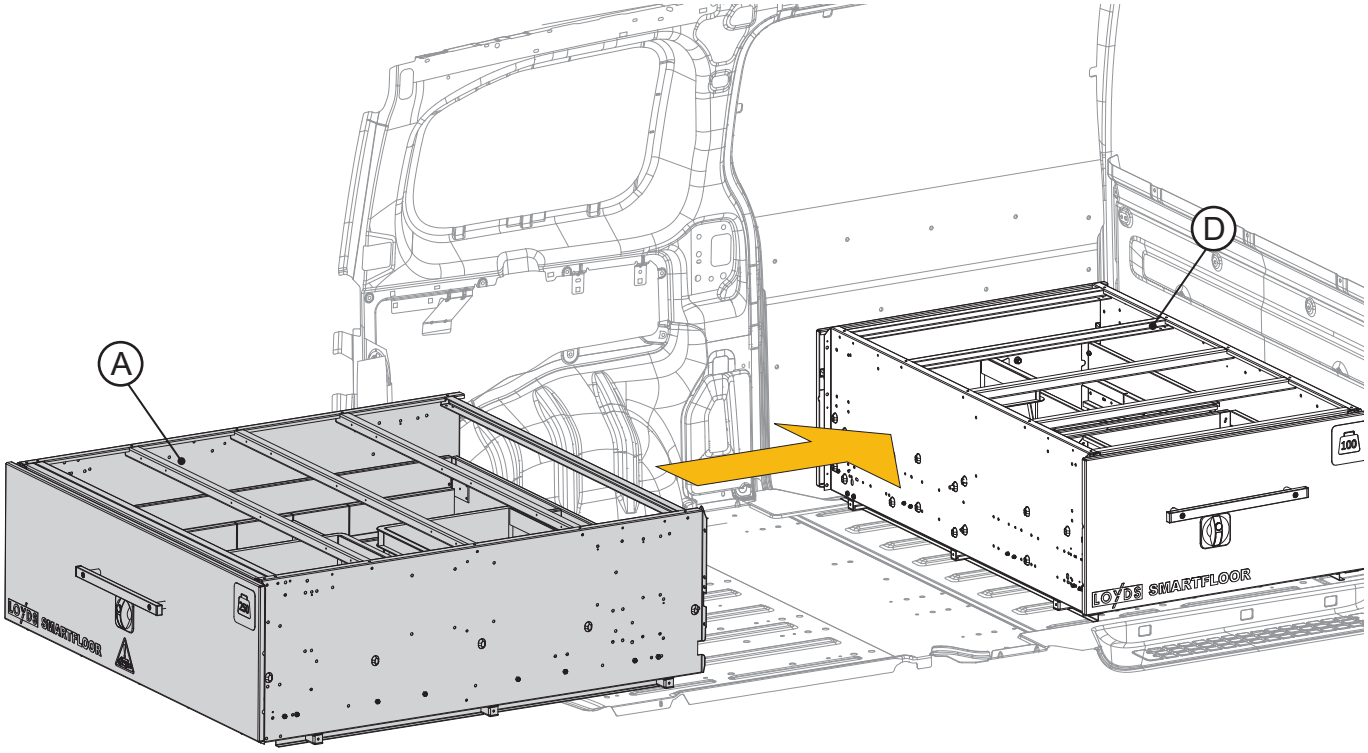
A
D
LOYDS SMARTFLOOR
LOYDS SMARTFLOOR

10

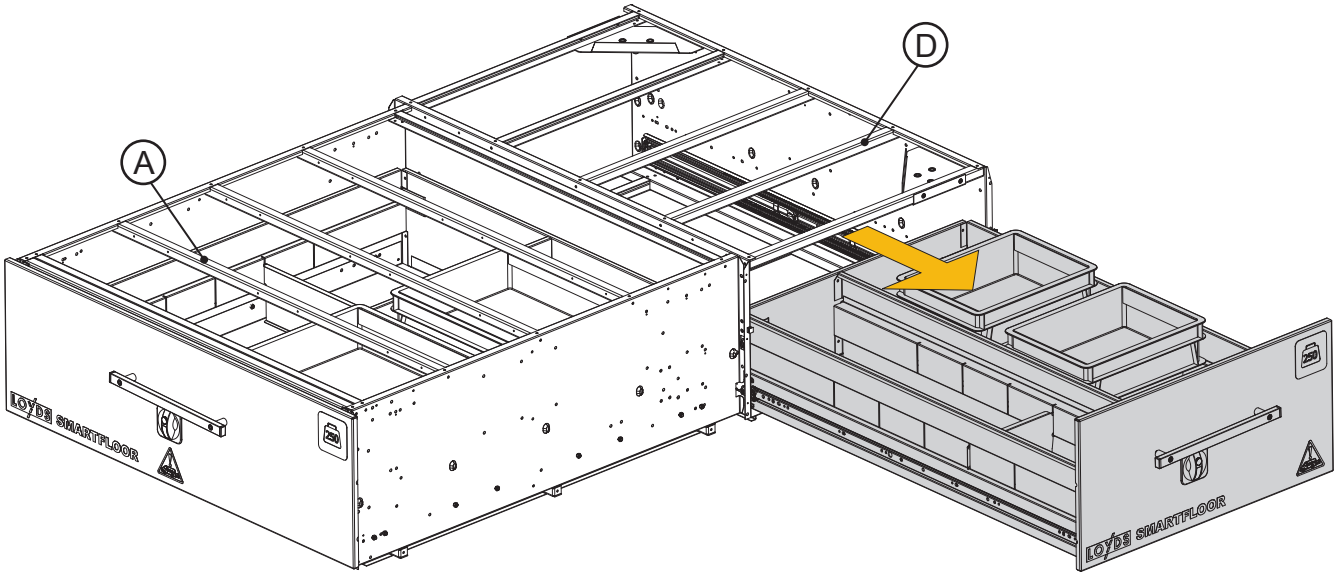
A
D
LOYDS SMARTFLOOR
LOYDS SMARTFLOOR

11

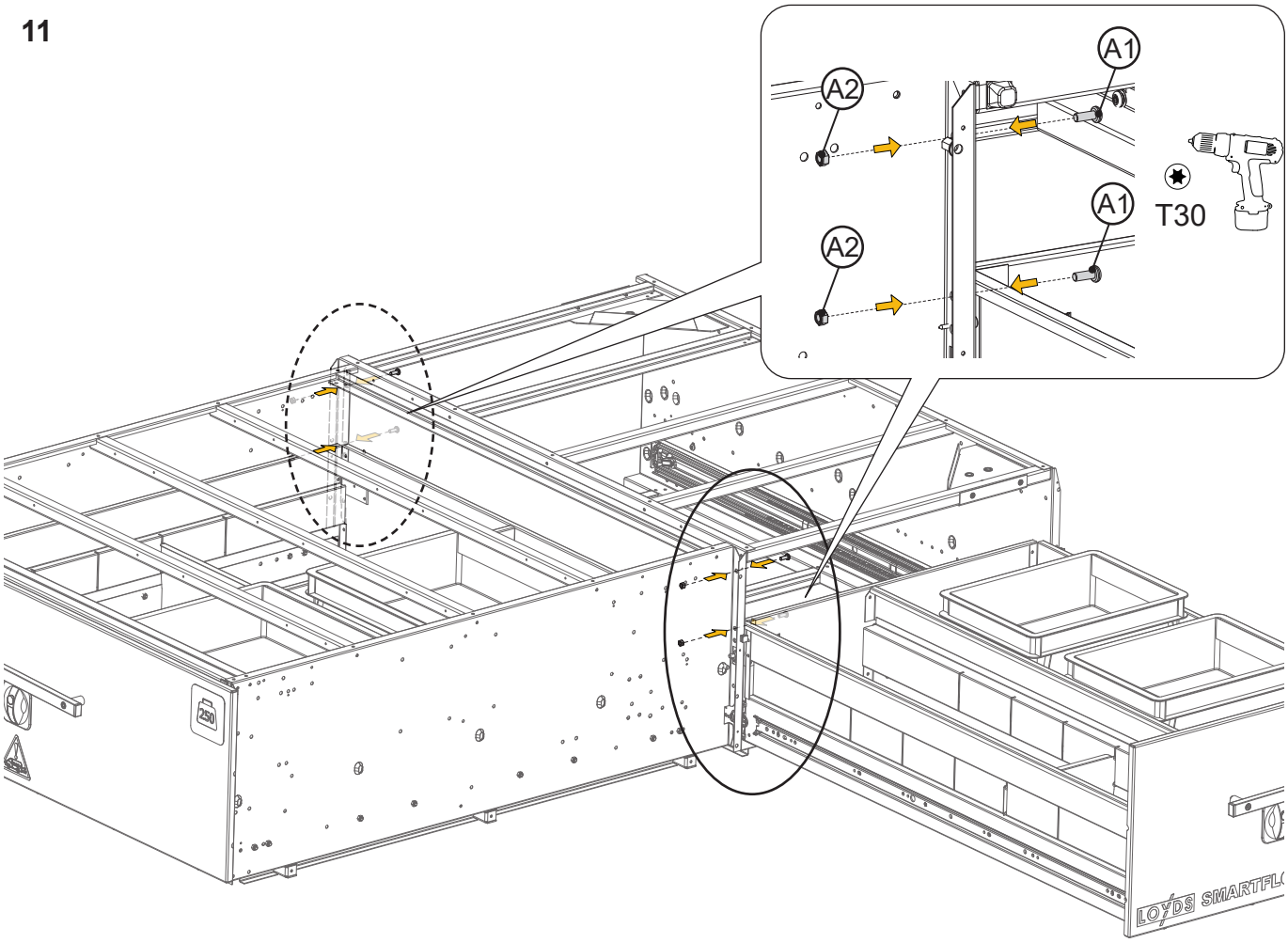
A1
A2
A1
A2
T30
LOYDS SMARTFL

12

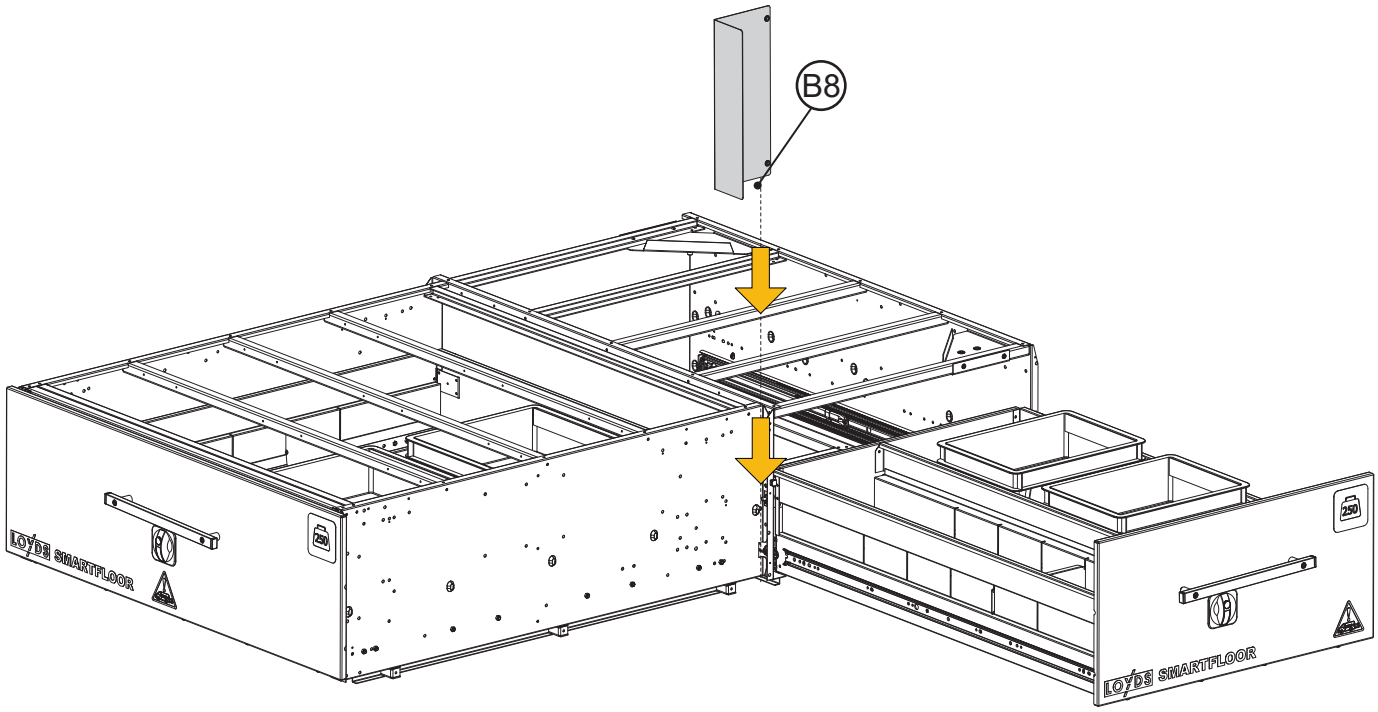
B8
LOYDS SMARTFLOOR
LOYDS SMARTFLOOR

13

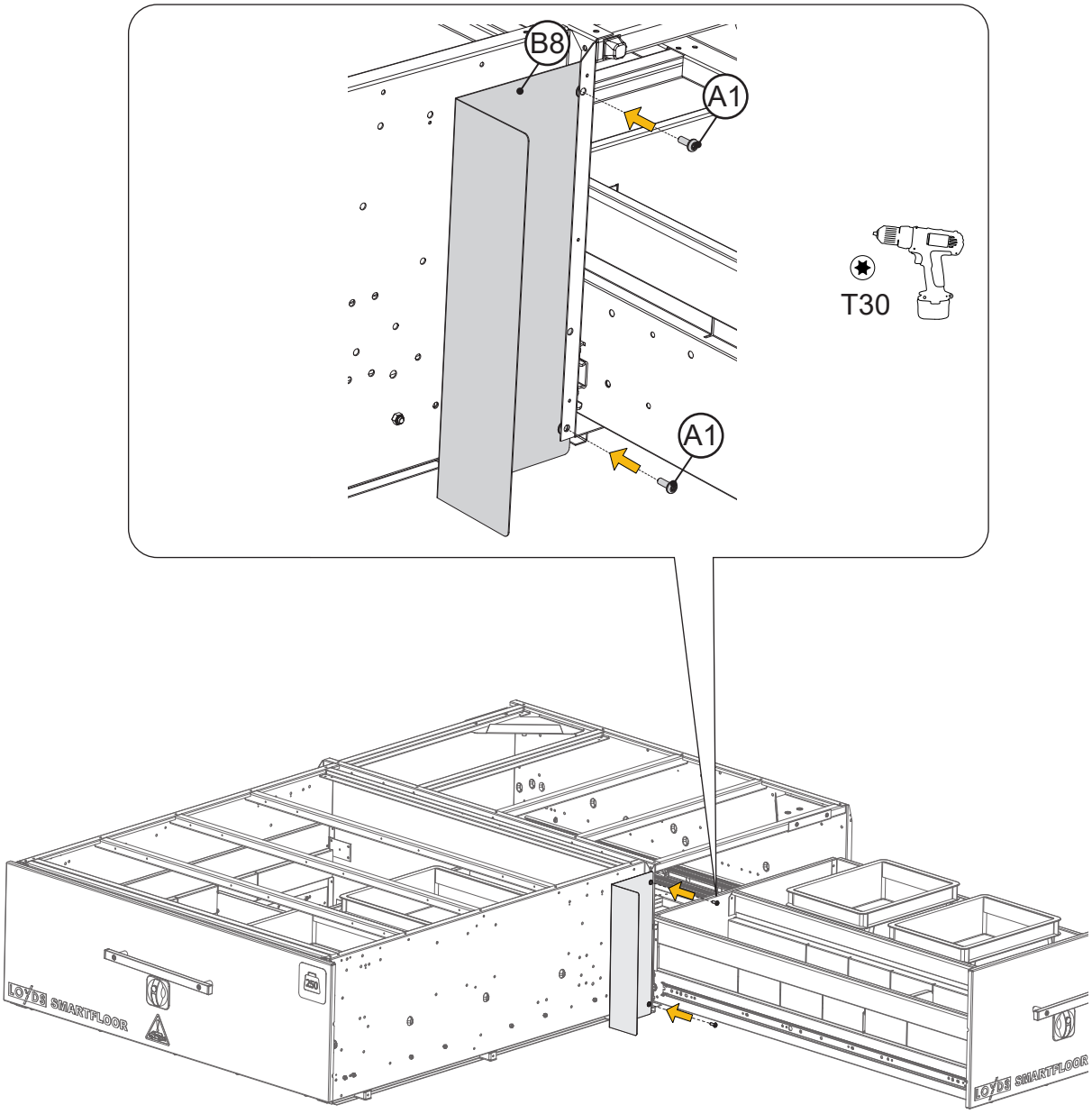
B8
A1
A1
T30
LOYDS SMARTFLOOR
LOYDS SMARTFLOOR

14

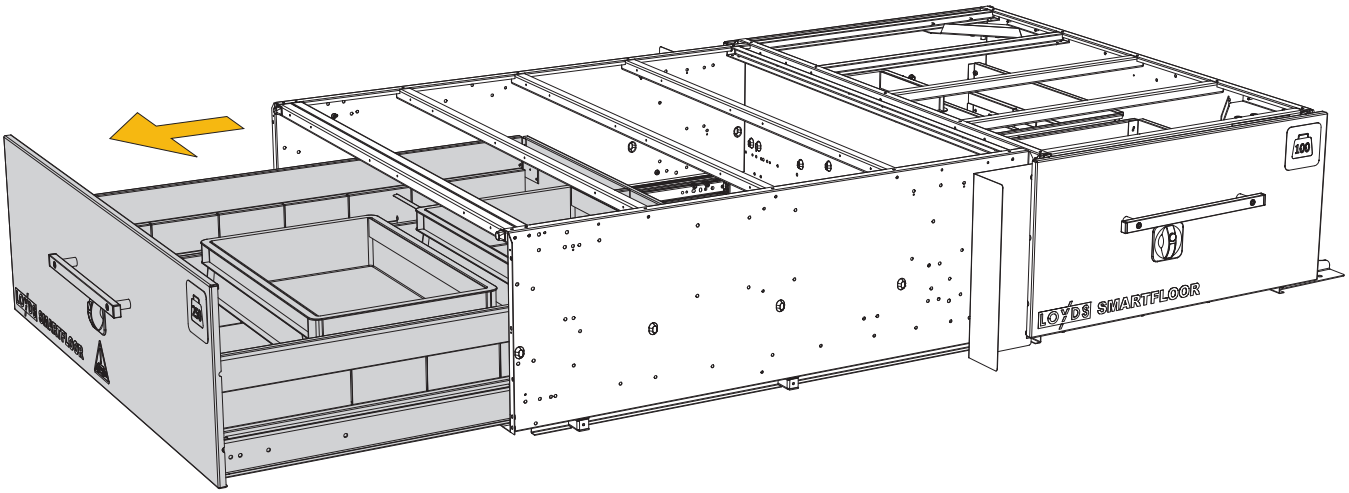
LOYDS SMARTFLOOR

15

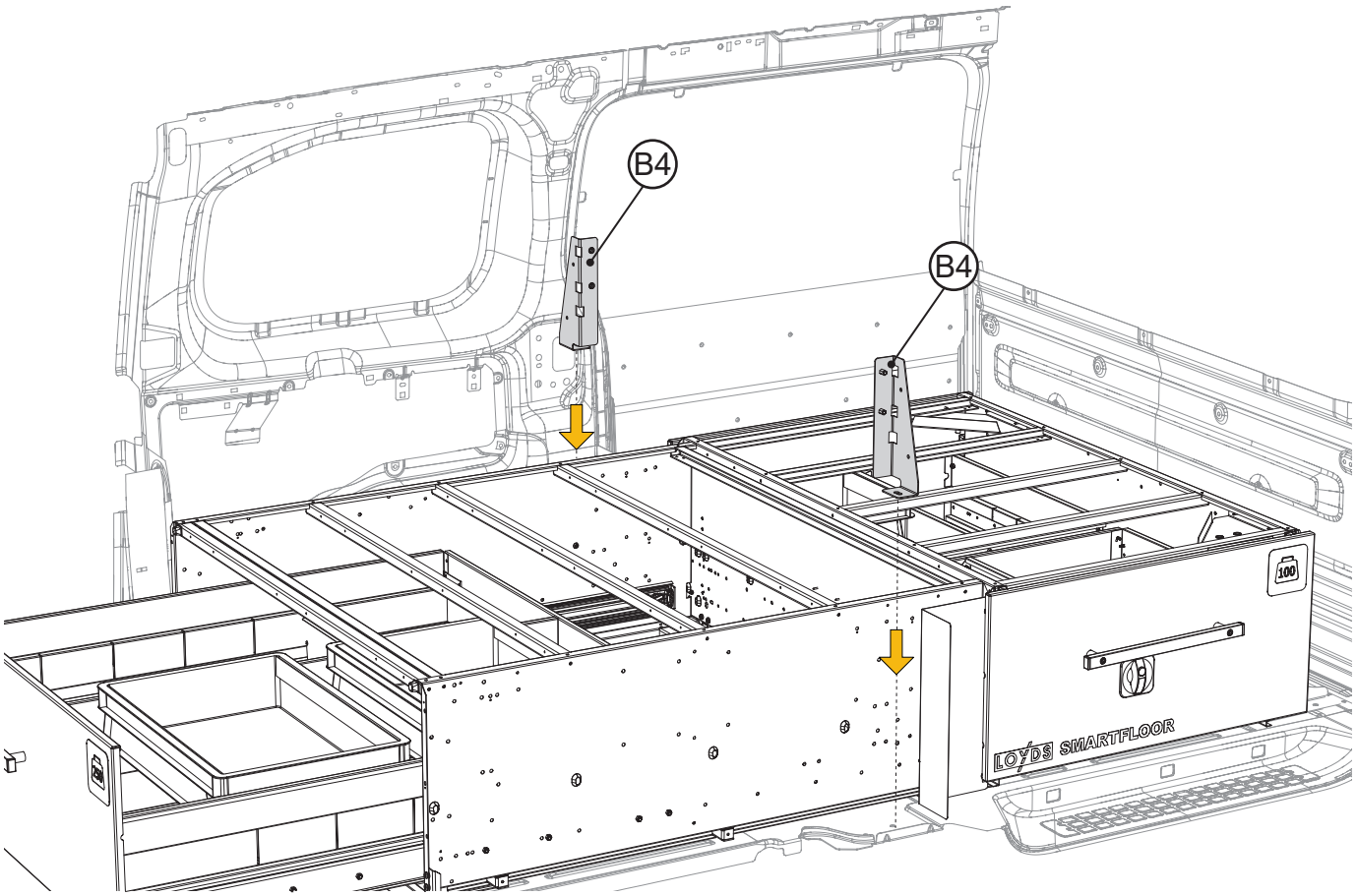

16

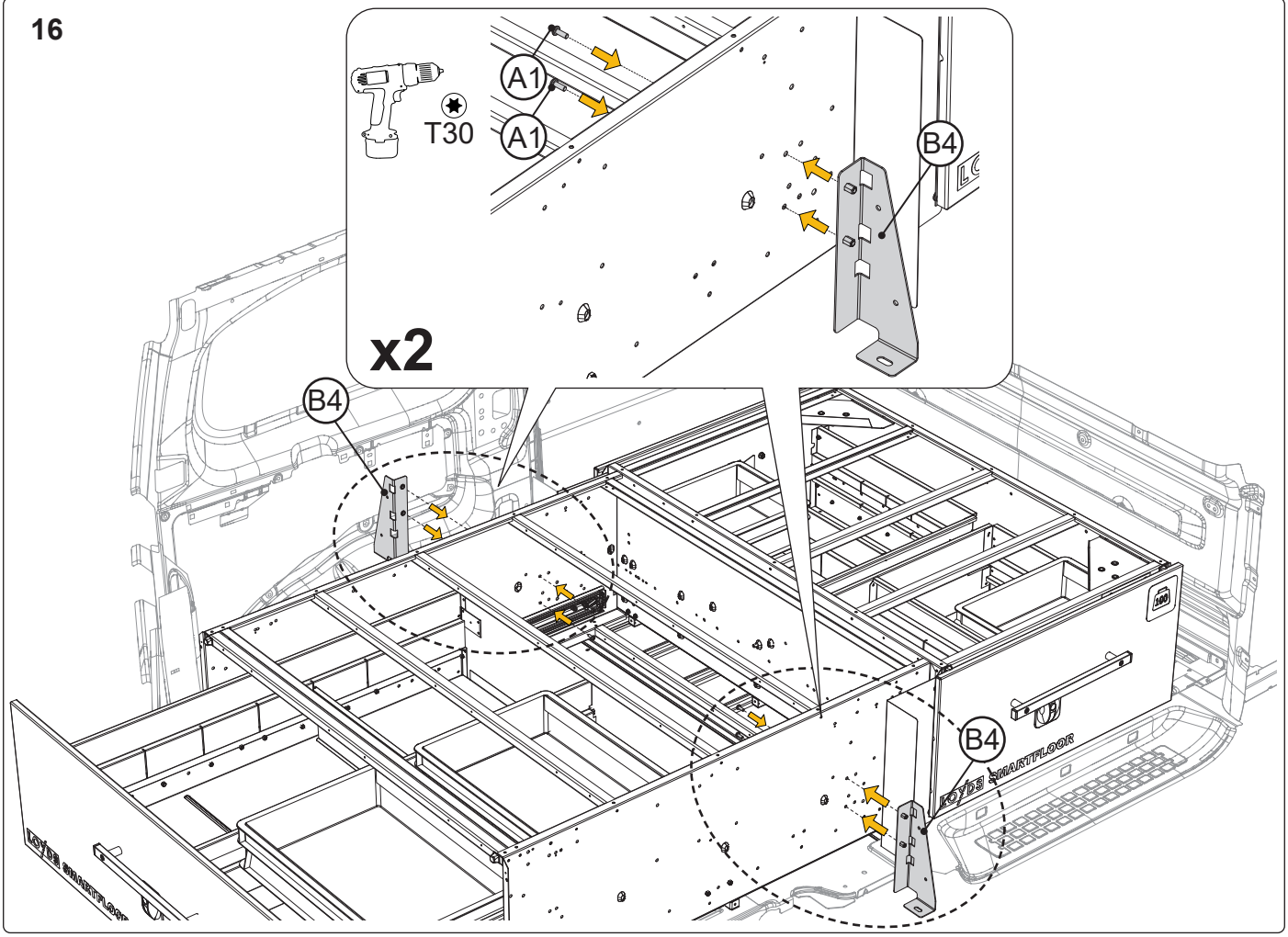

17

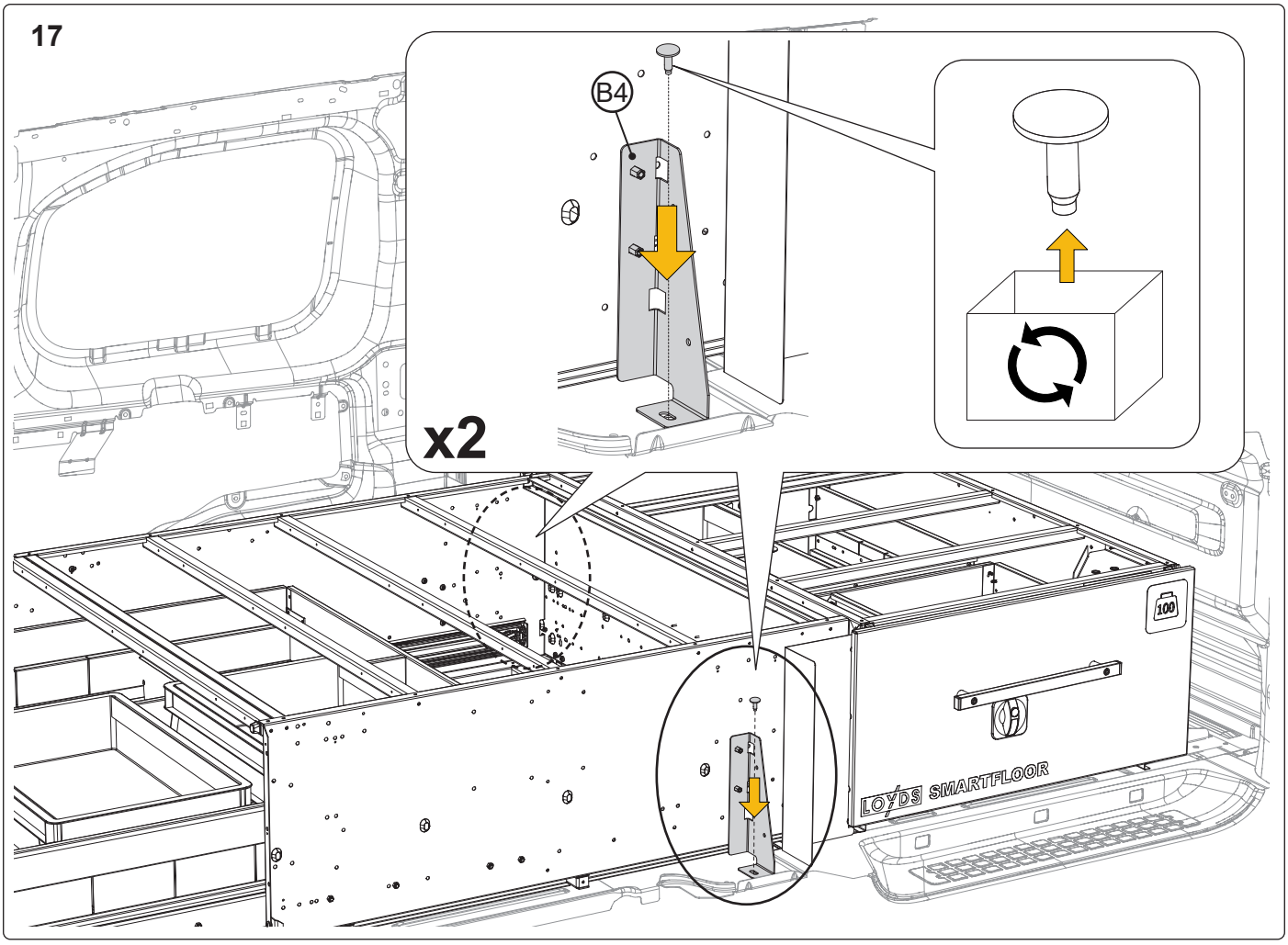
B4
x2
100
LOYDS SMARTFLOOR

18

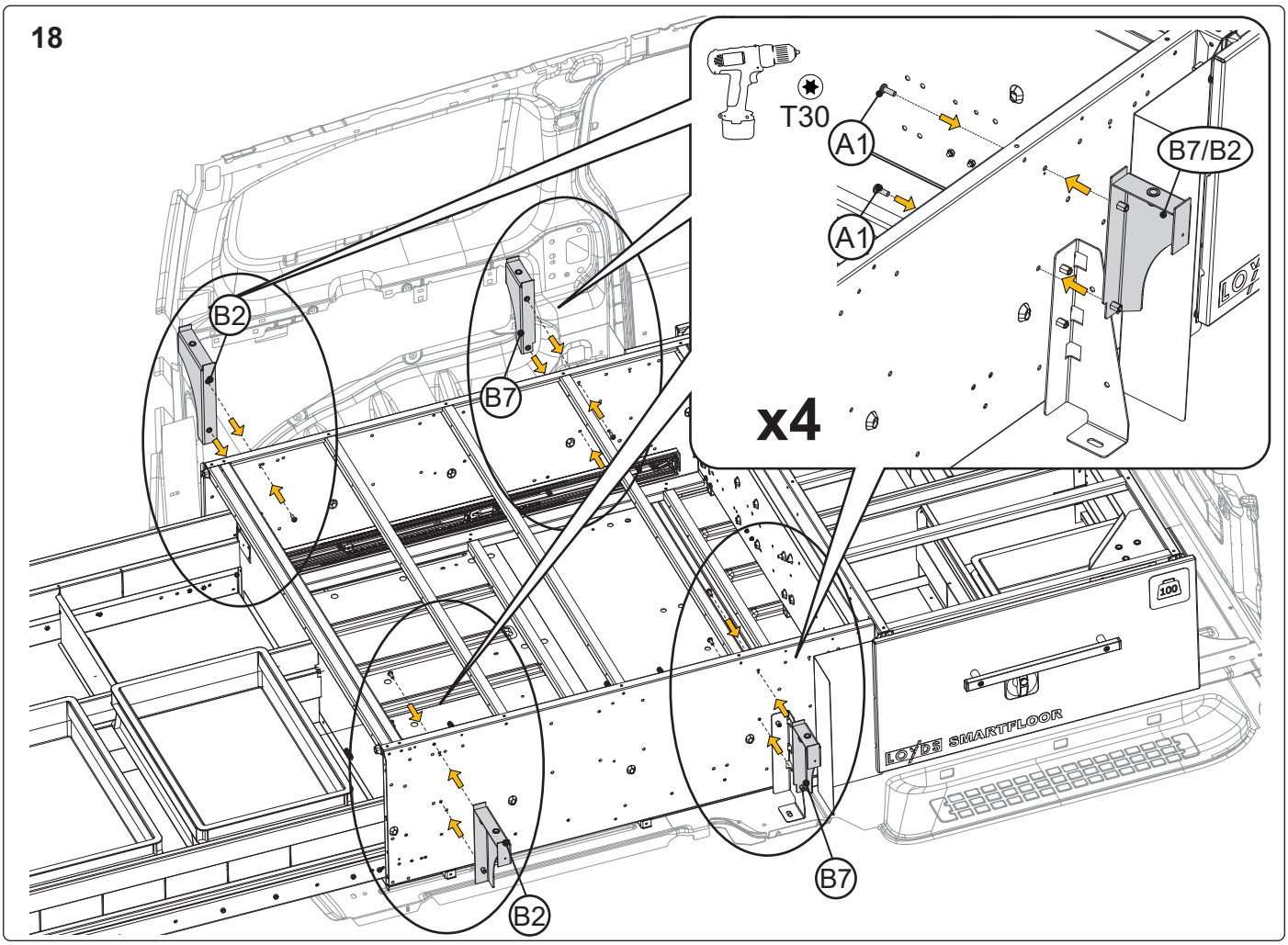
T30
A1
A1
B7/B2
x4
B2
B7
B7
B2
100
LOYDS SMARTFLOOR

19

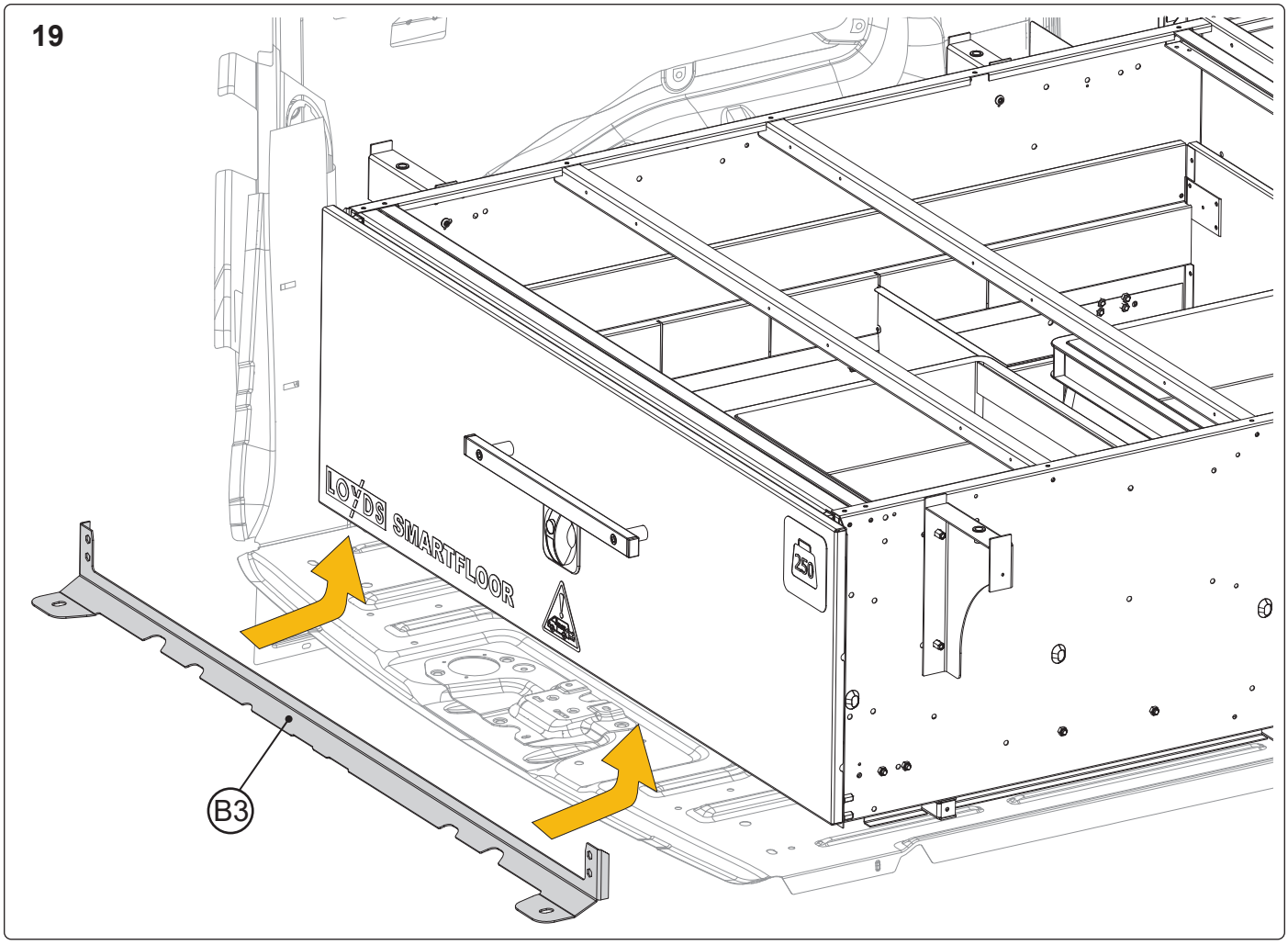

20

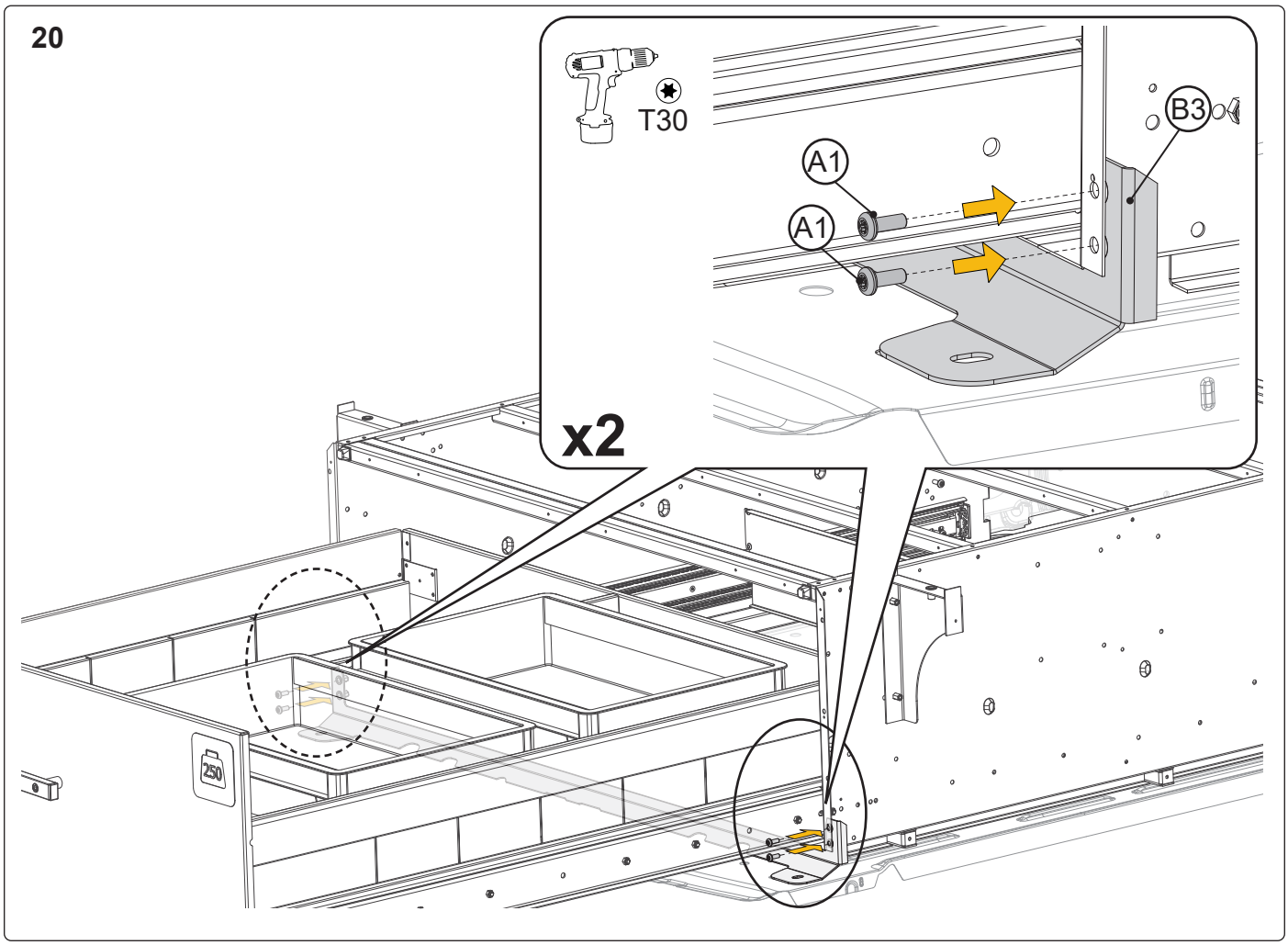

21

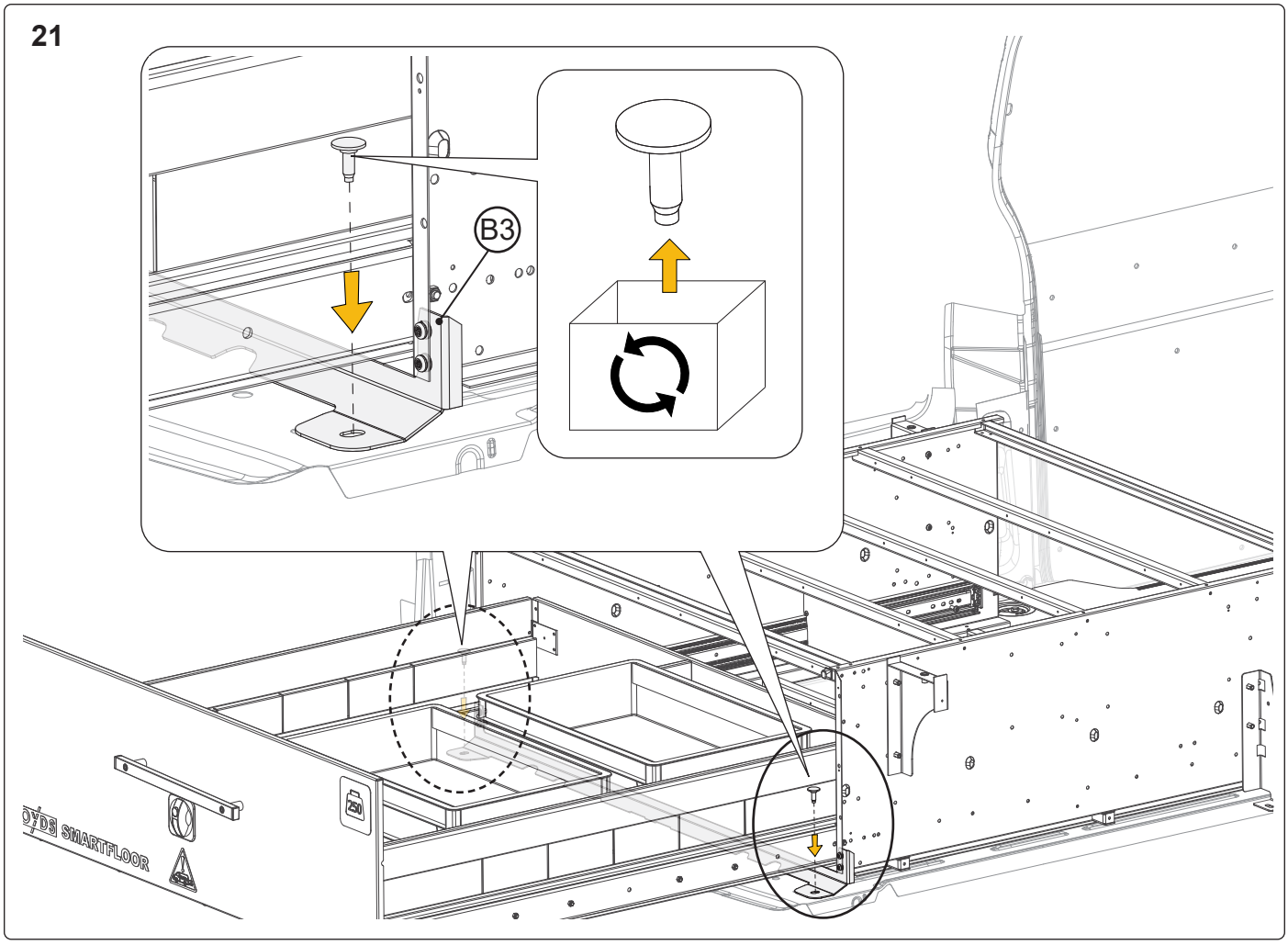
B3
250
LOYDS SMARTFLOOR

22

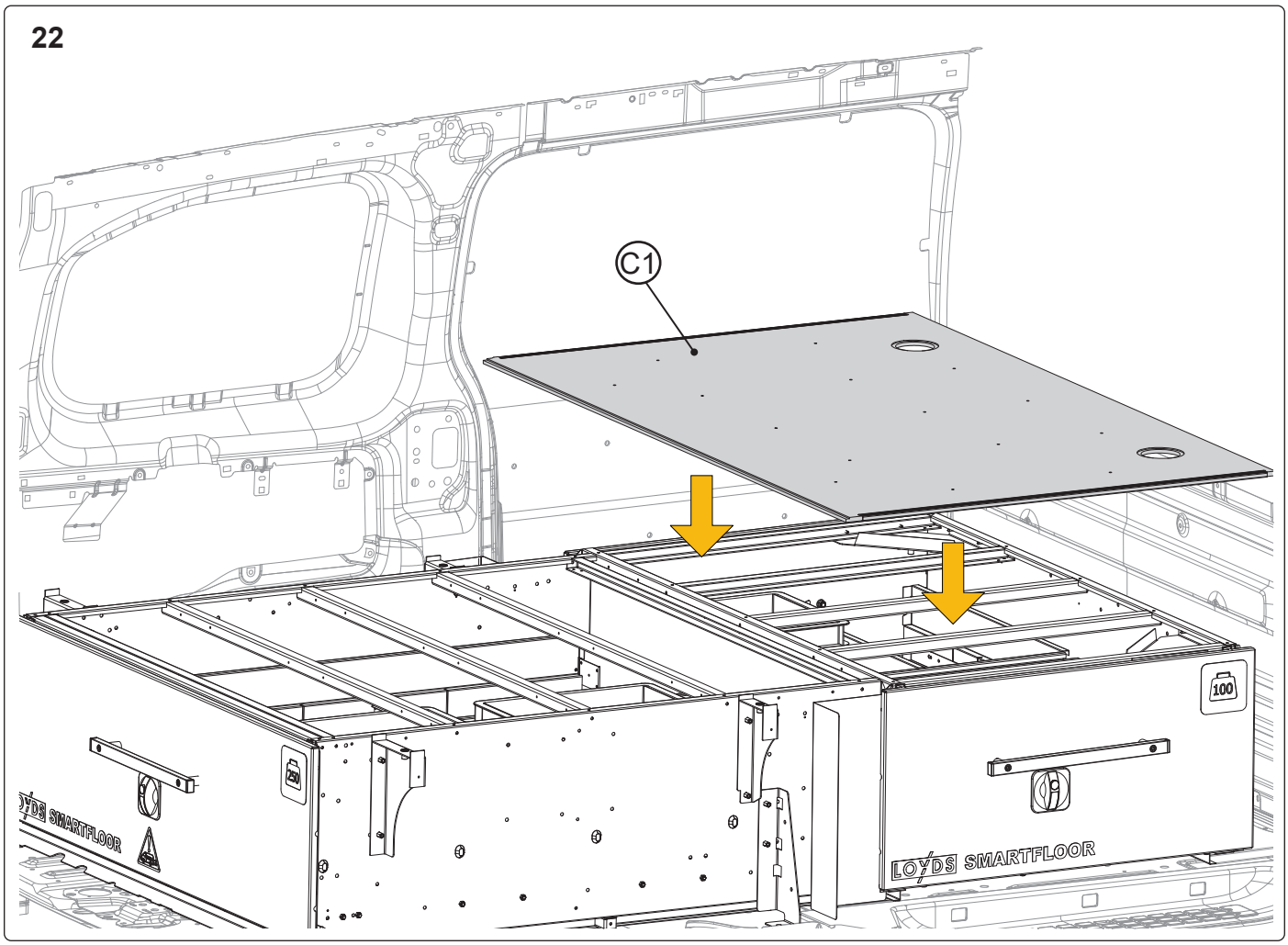
C1
250
100
LOYDS SMARTFLOOR
LOYDS SMARTFLOOR

23

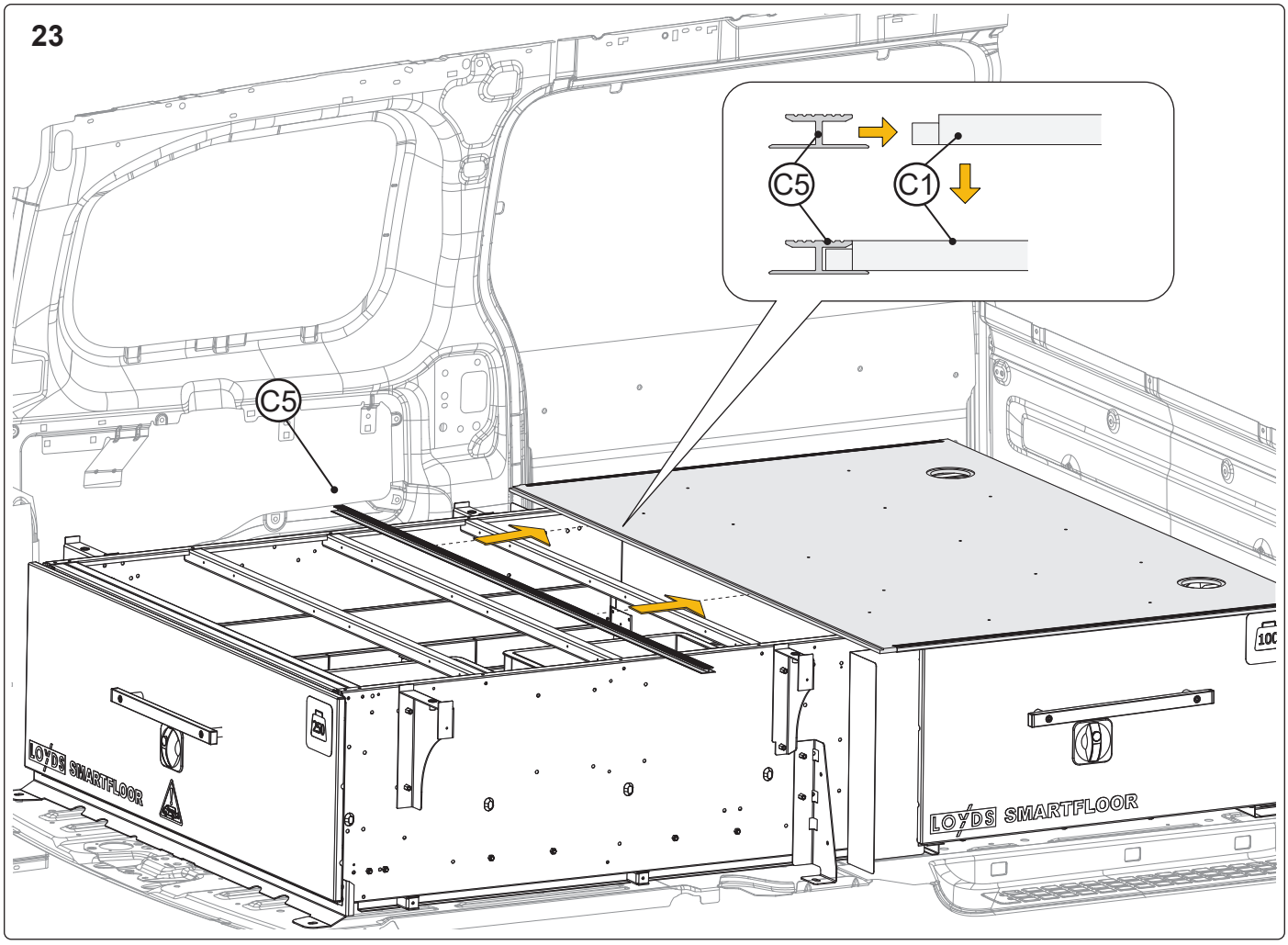
C5
C1
C5
LOYDS SMARTFLOOR
LOYDS SMARTFLOOR

24

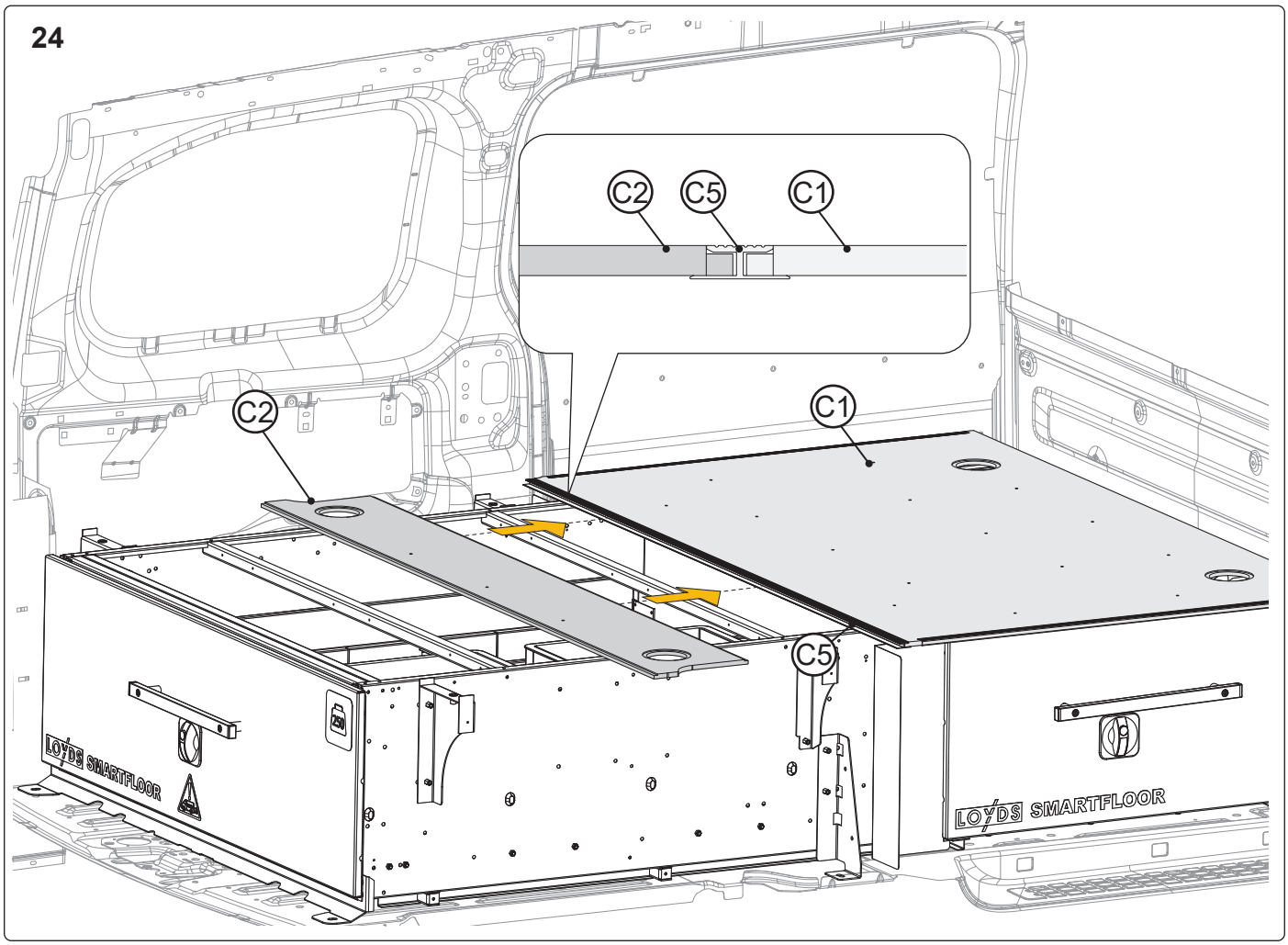
C2
C5
C1
C2
C1
C5
LOYDS SMARTFLOOR
LOYDS SMARTFLOOR

25

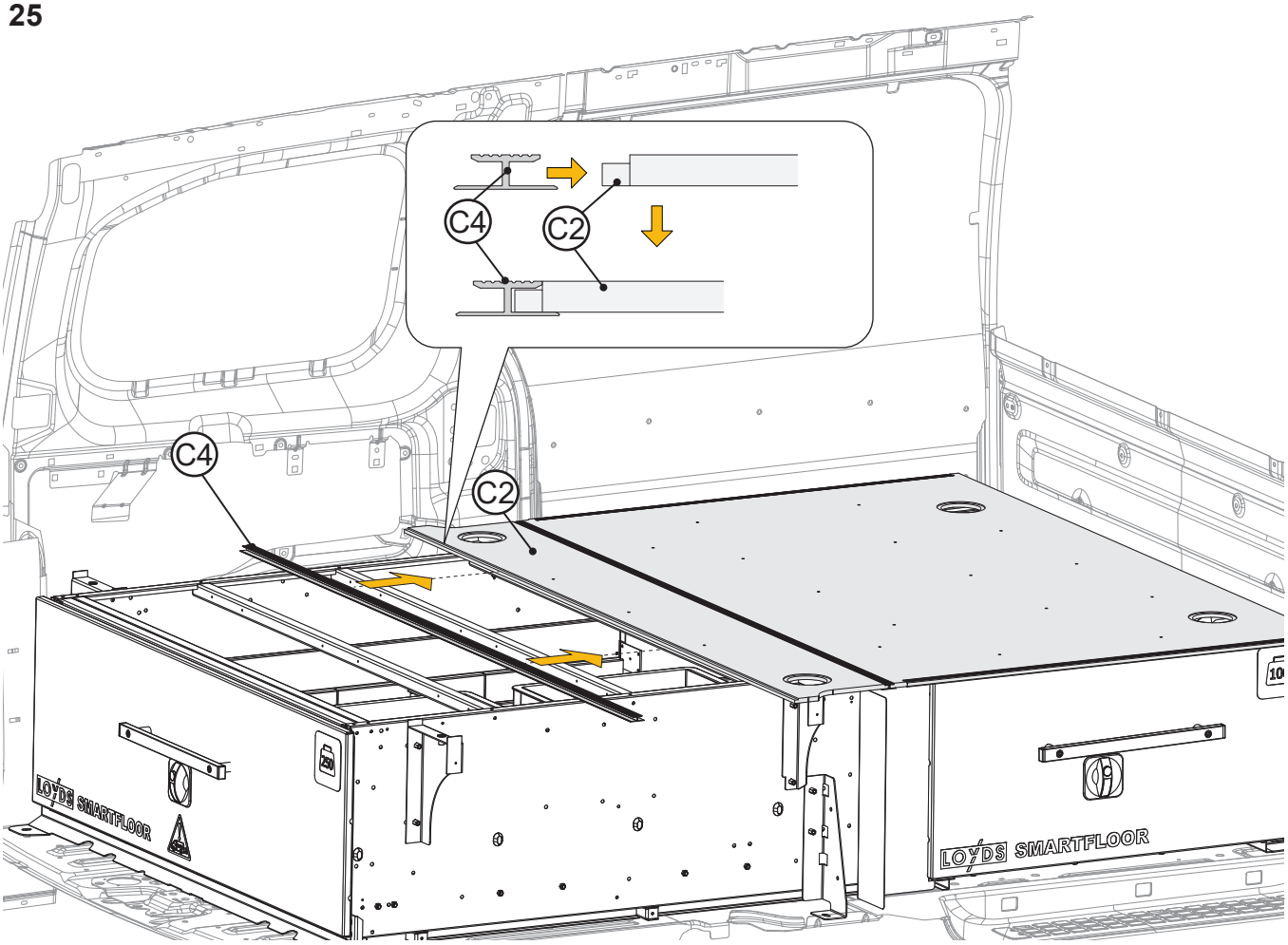
C4
C2
C4
C2
LOYDS SMARTFLOOR
LOYDS SMARTFLOOR

26

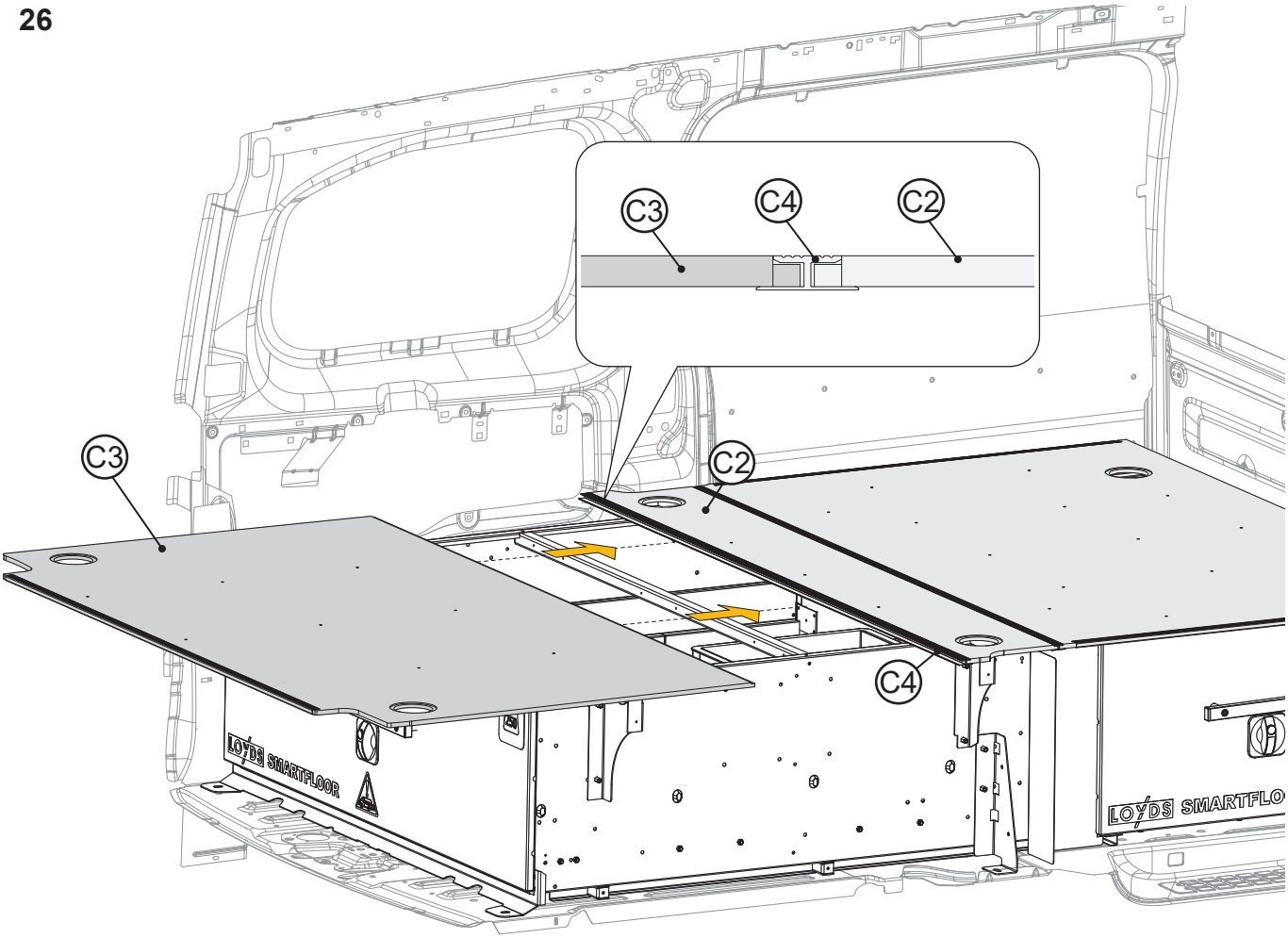
C3
C4
C2
C3
C2
C4
LOYDS SMARTFLOOR
LOYDS SMARTFLO

27

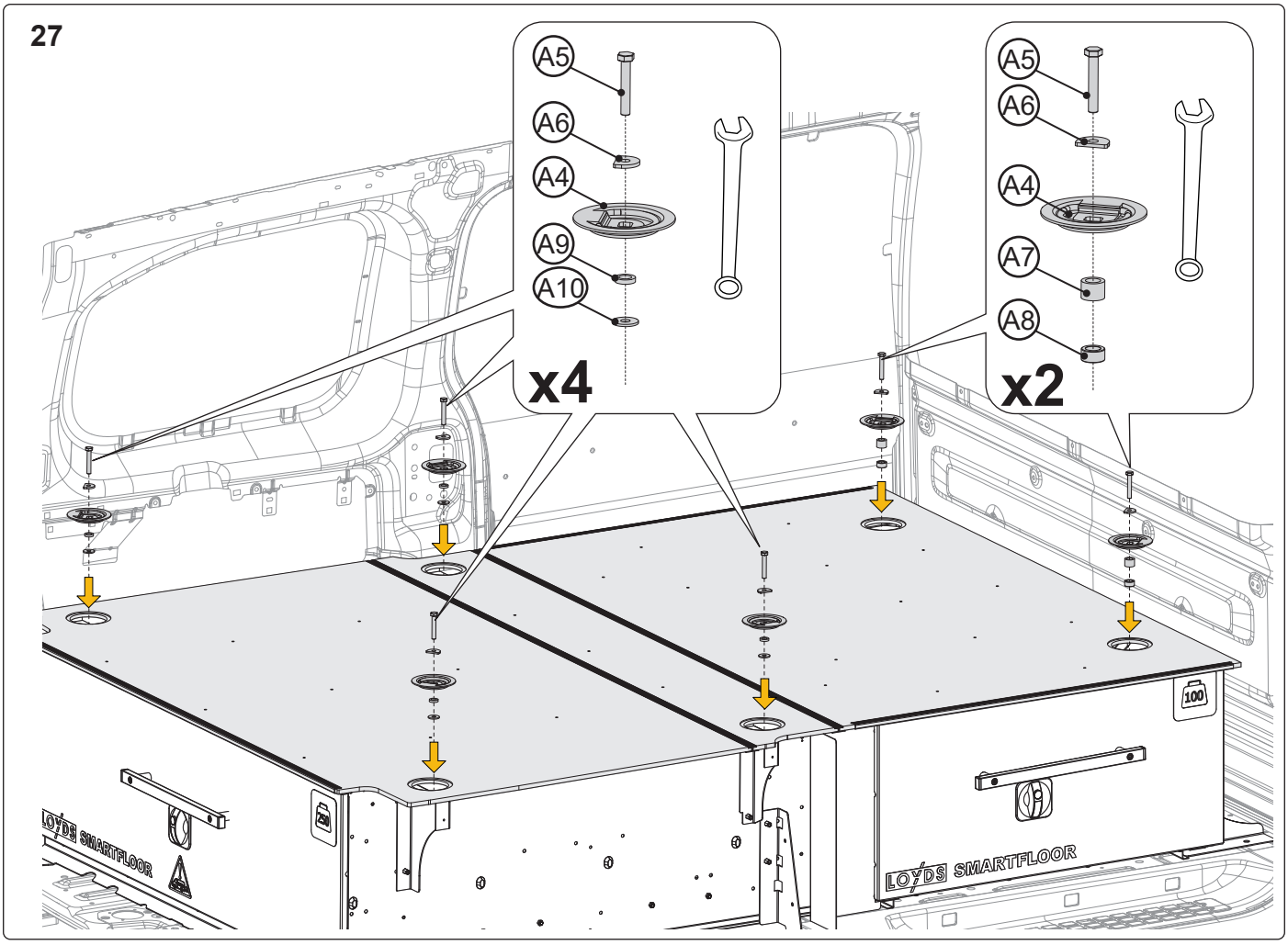
A5
A6
A4
A9
A10
x4
A5
A6
A4
A7
A8
x2
LOYDS SMARTFLOOR
LOYDS SMARTFLOOR

28

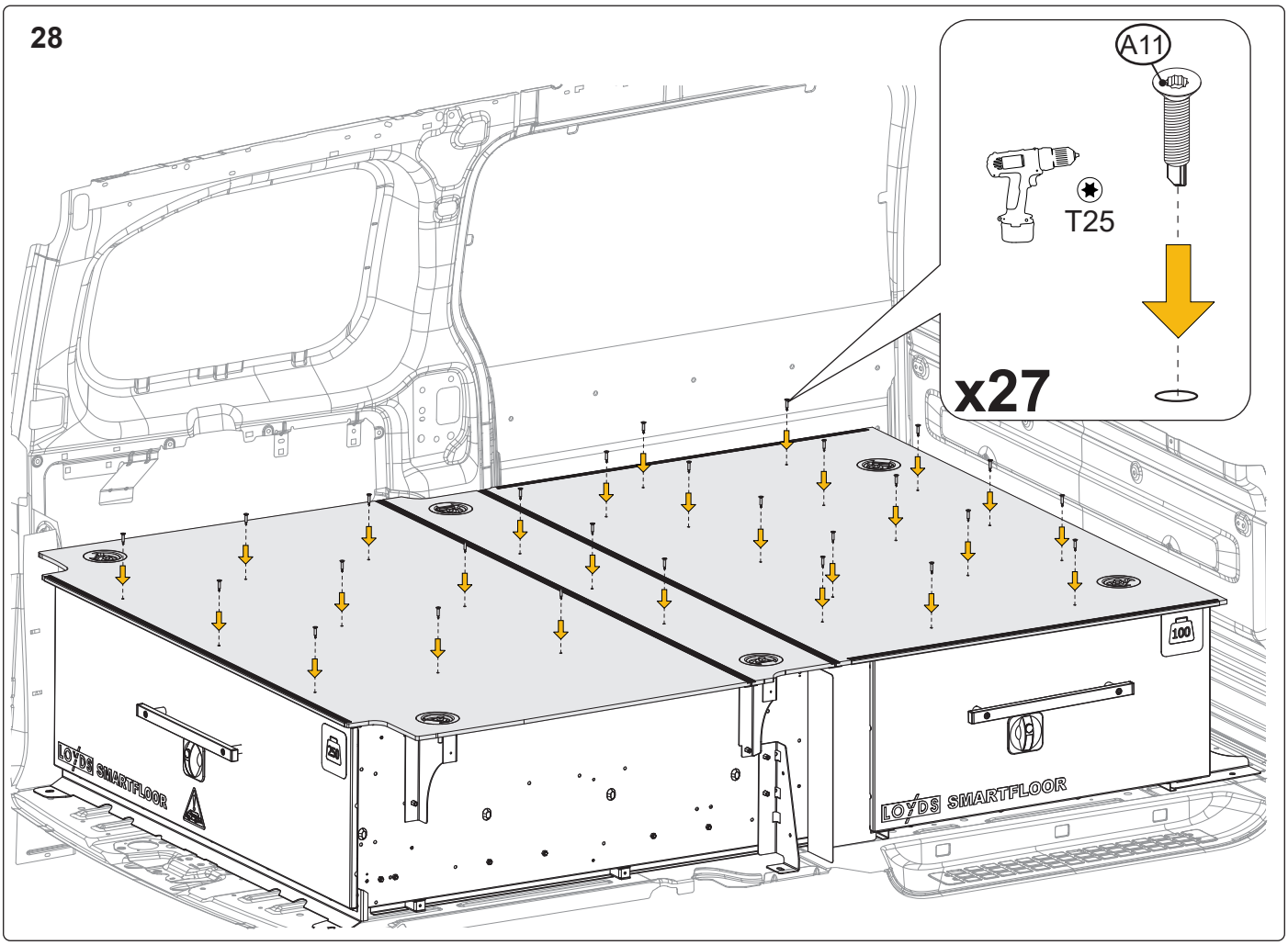
A11
T25
x27
LOYDS SMARTFLOOR
LOYDS SMARTFLOOR

29

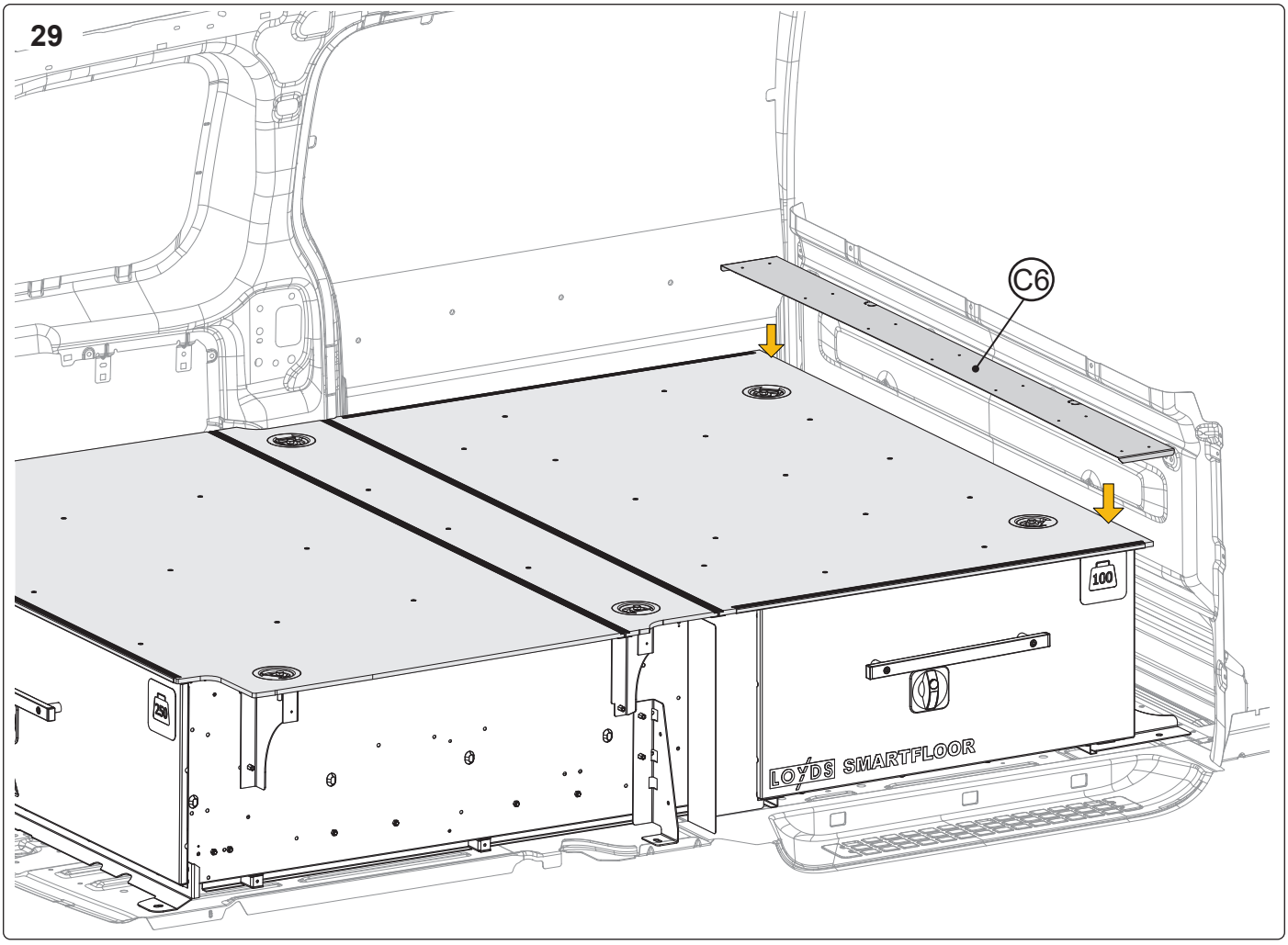
C6
100
250
LOYDS SMARTFLOOR

30

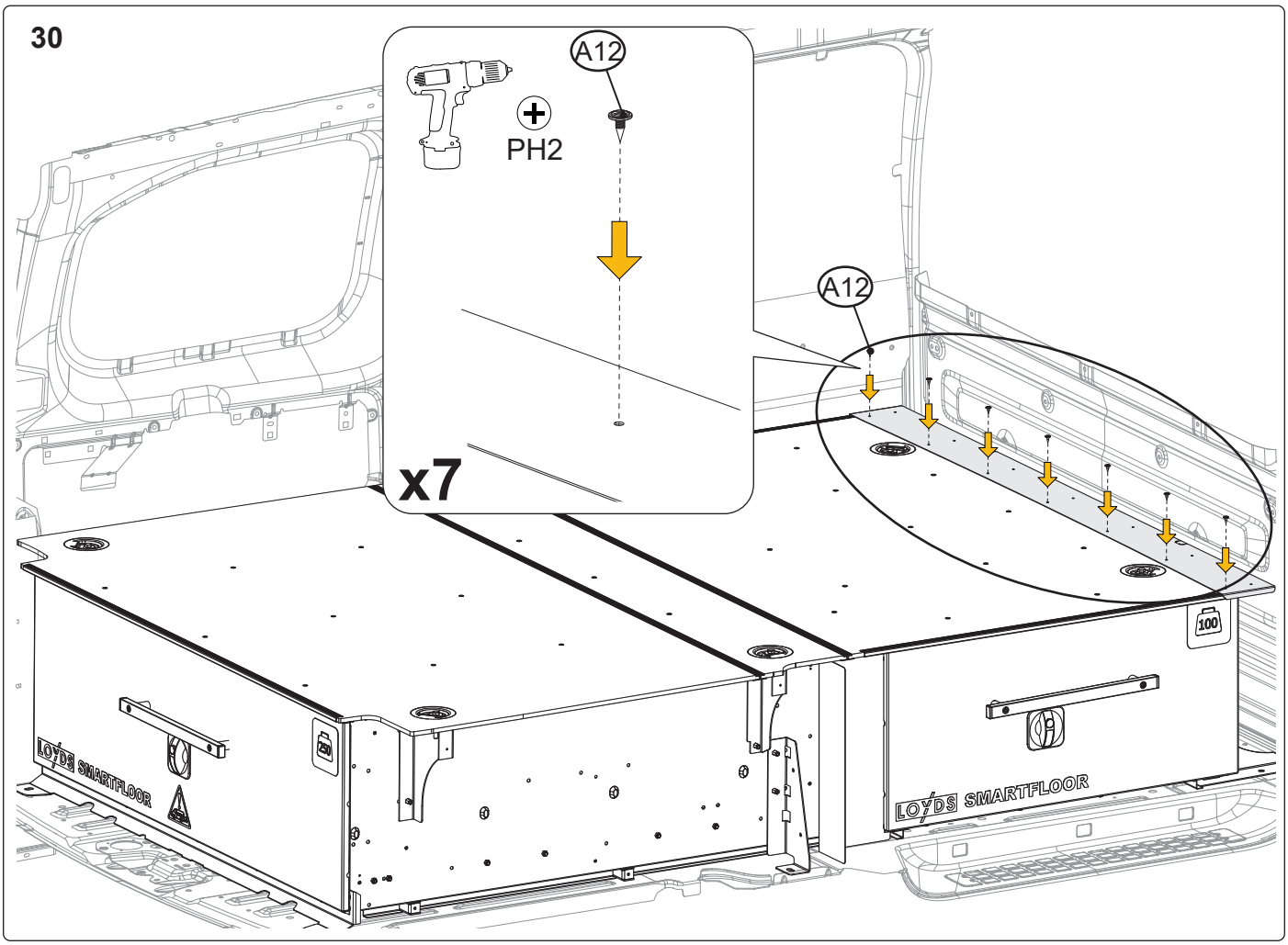
A12
PH2
x7
A12
100
250
LOYDS SMARTFLOOR
LOYDS SMARTFLOOR

31

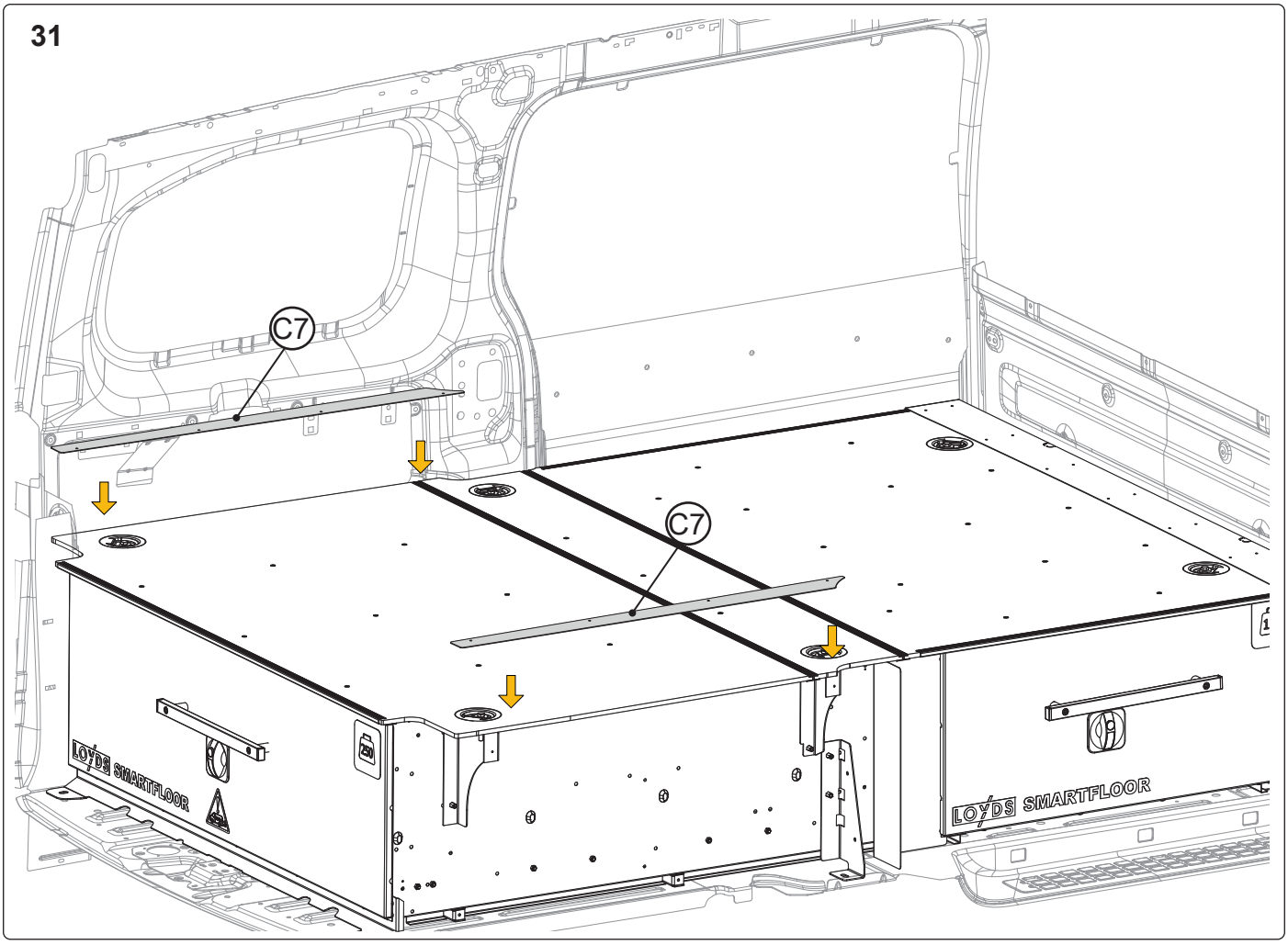
C7
C7
LOYDS SMARTFLOOR
LOYDS SMARTFLOOR

32

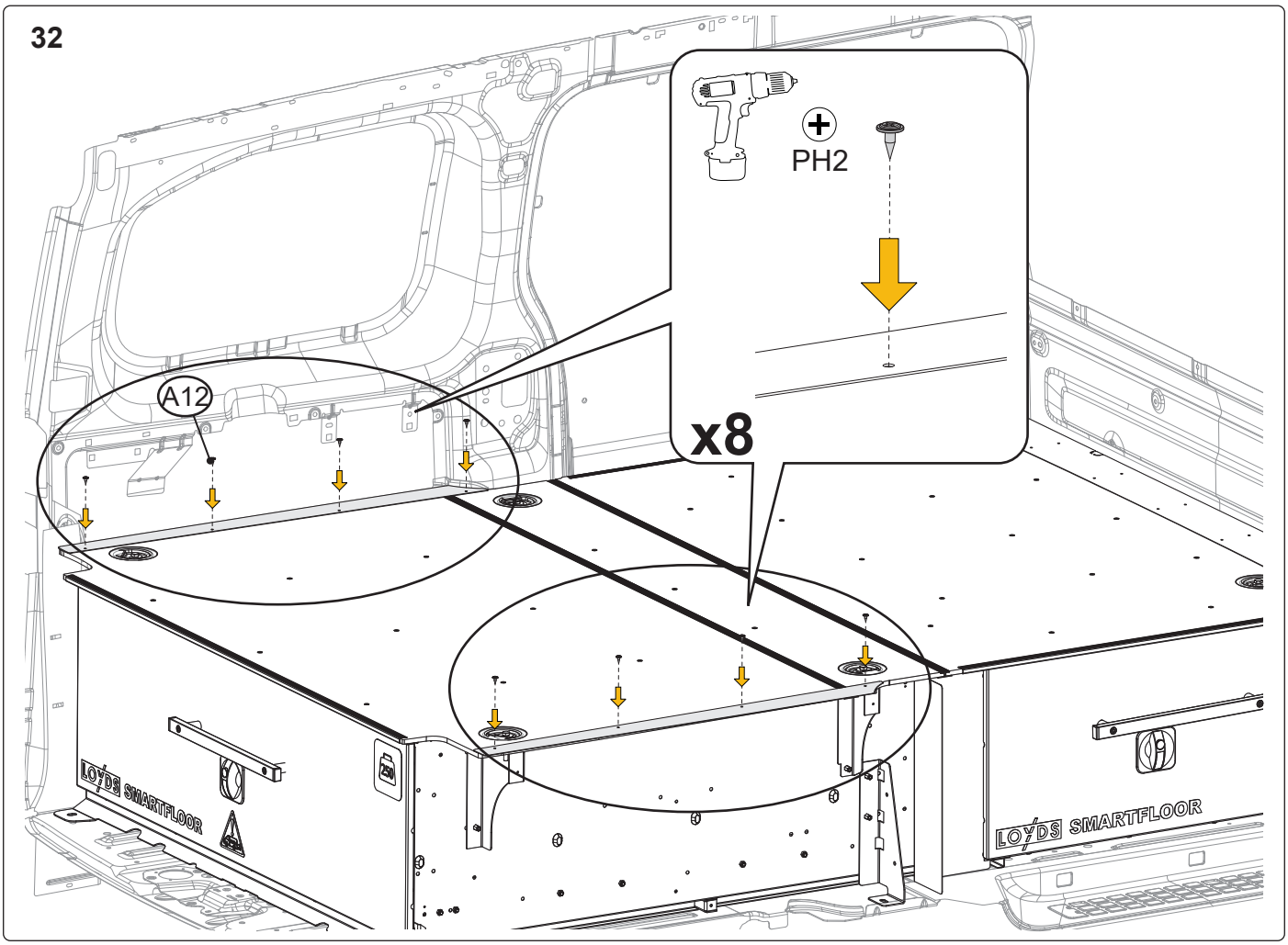
PH2
A12
x8
LOYDS SMARTFLOOR
LOYDS SMARTFLOOR

33

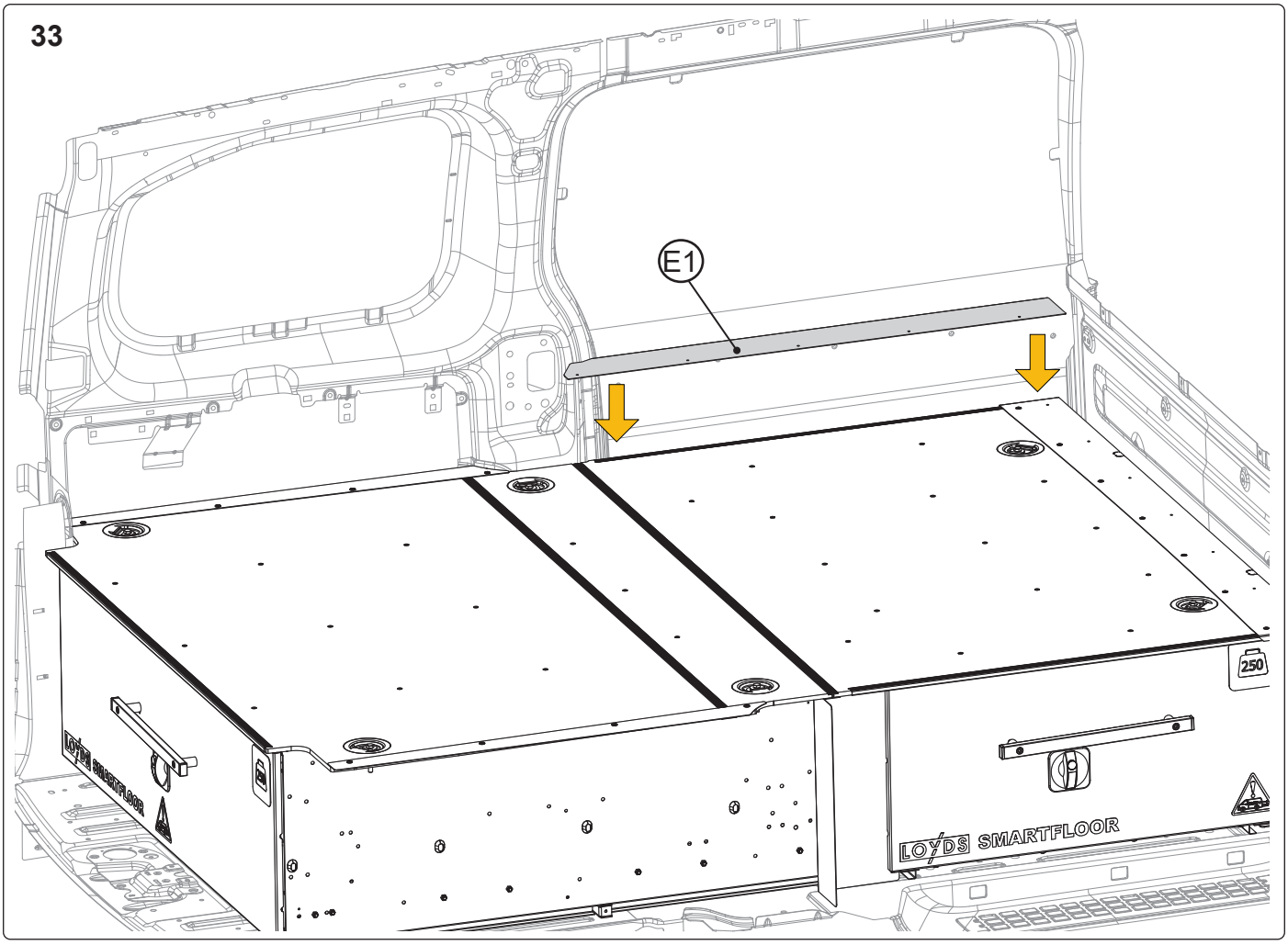

34

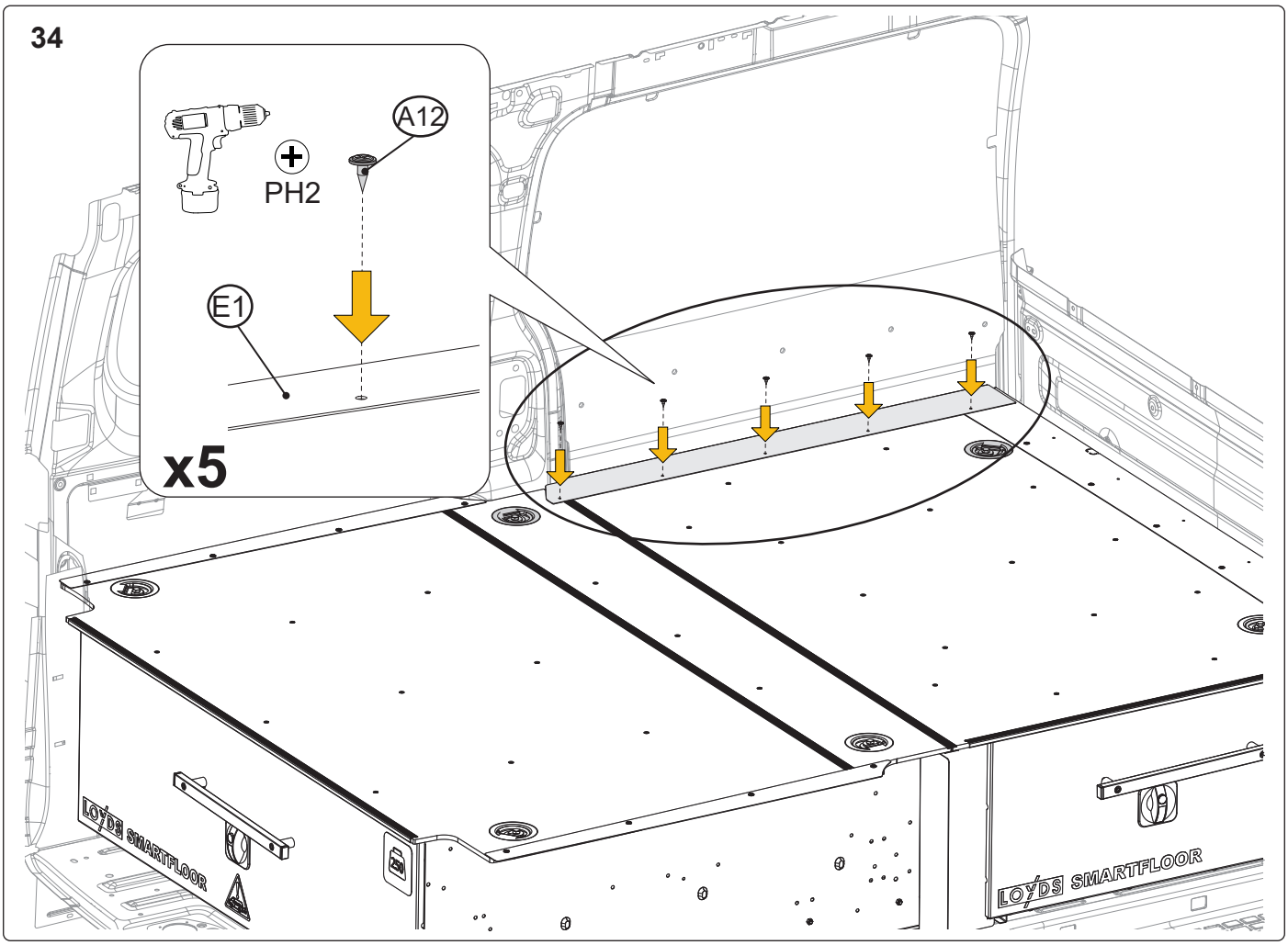

35

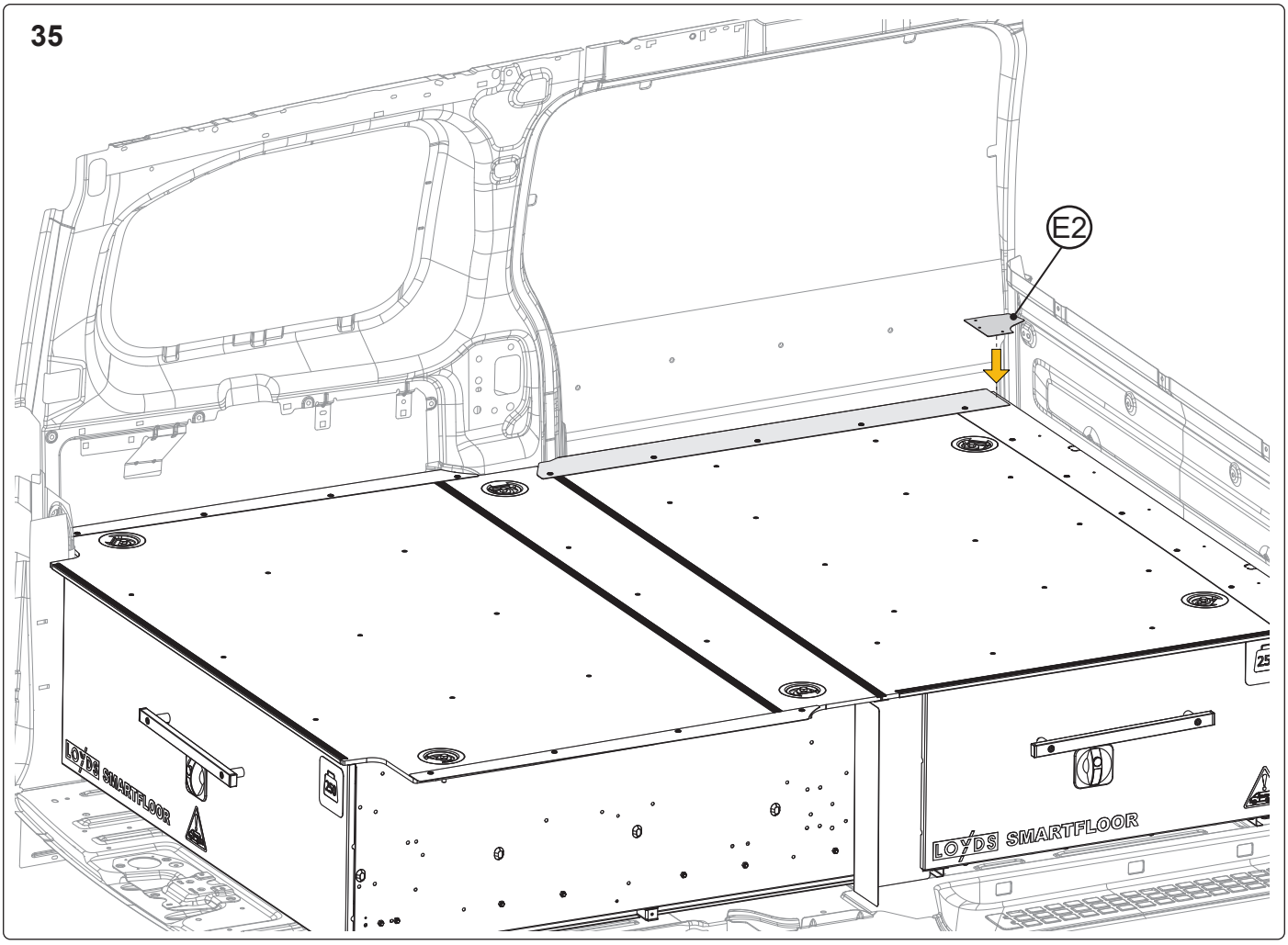
E2
LOYDS SMARTFLOOR
LOYDS SMARTFLOOR

36

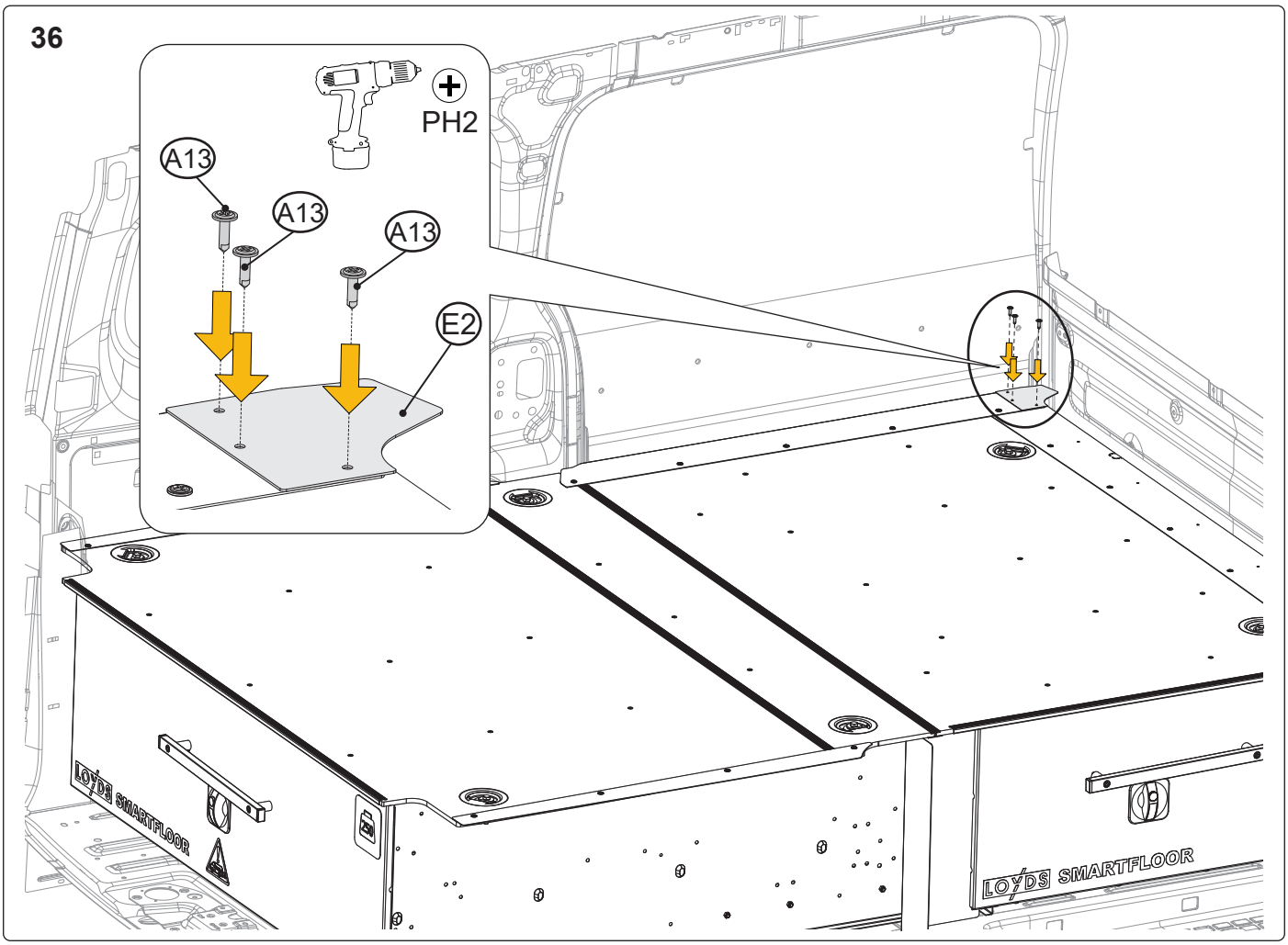
PH2
A13
A13
A13
E2
LOYDS SMARTFLOOR
LOYDS SMARTFLOOR

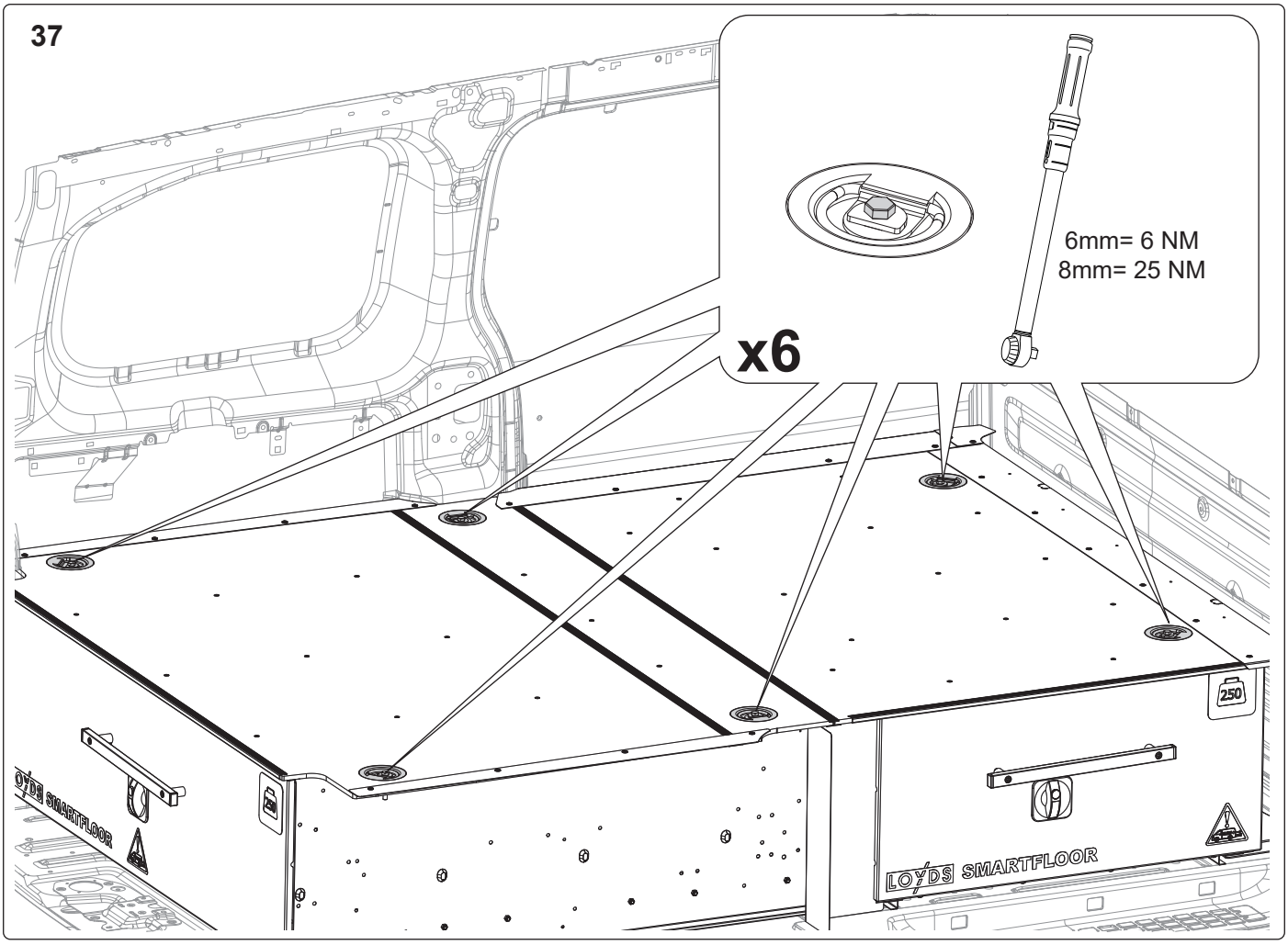
37
x6
6mm= 6 NM
8mm= 25 NM
LOYDS SMARTFLOOR
250