Proace, Expert, Jumpy, Scudo, Vivaro

Smartfloor Rear Module Drawer Short L1 L2

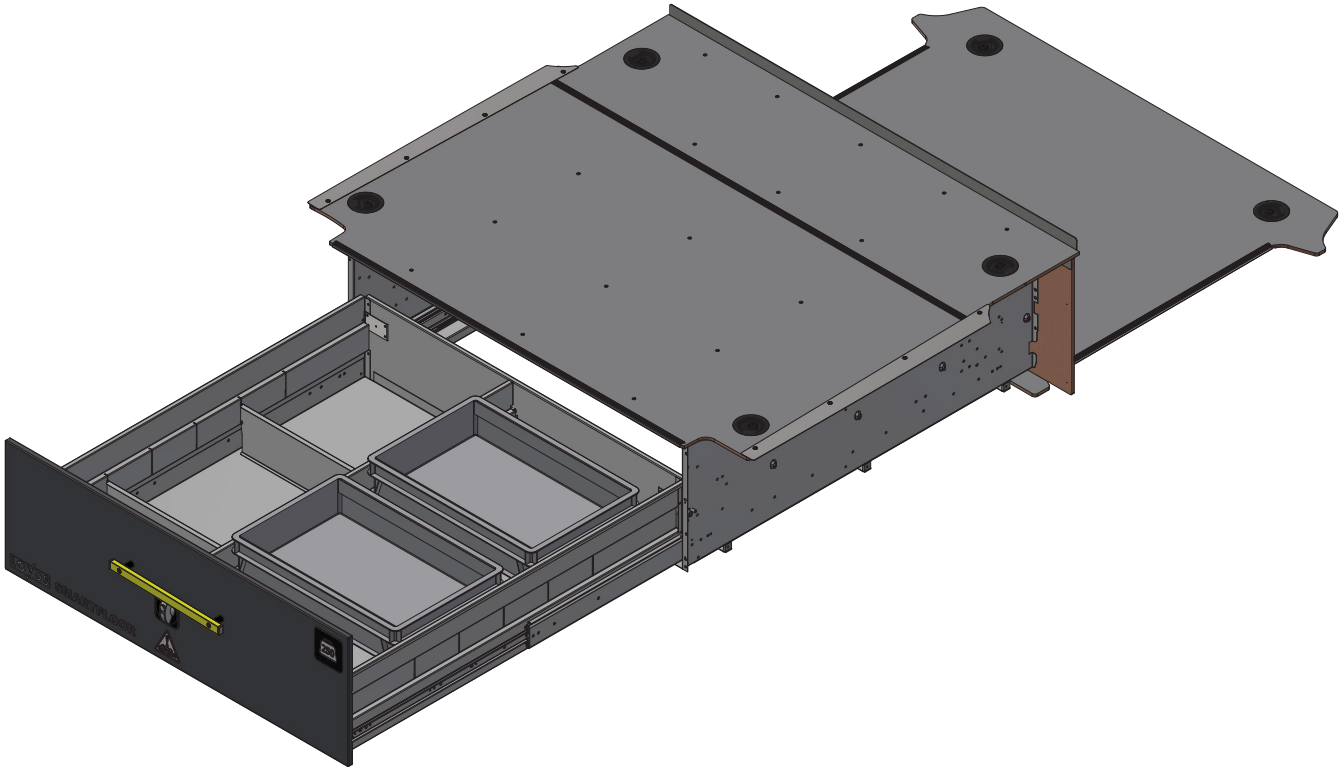

Installation Manual 15028915_B

Loyds Industri AS - 2026-02-09

LOYDS

Revision Record

Rev nr	Date	Page	Picture	Update	New	Deleted steps
A	2025-09-26				X	
B	2026-02-09	2		Added compatible cars		

Compatible cars

Toyota Proace from 2016
Peugeot Expert from 2016
Citroën Jumpy from 2016
Opel Vivaro from 2019
Fiat Scudo from 2024

Use colors when printing this installation manual. / Ved utskrift, bruk farger.

Tools

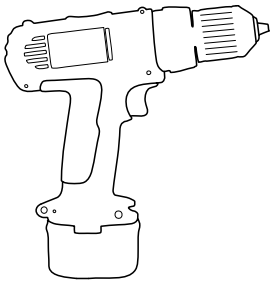

T25
T30
T40

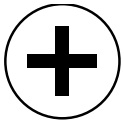

PH2

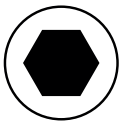

6 mm

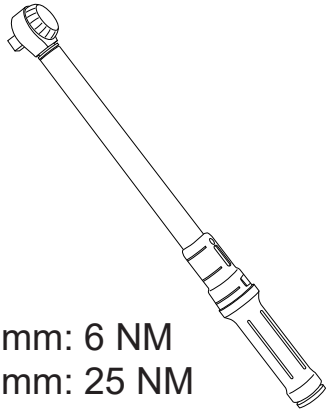

6 mm: 6 NM
8 mm: 25 NM

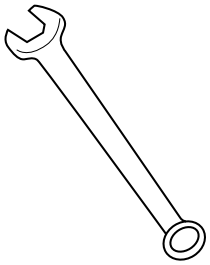

13 mm

15025460 Rear Module Drawer L1 L2 PEJ

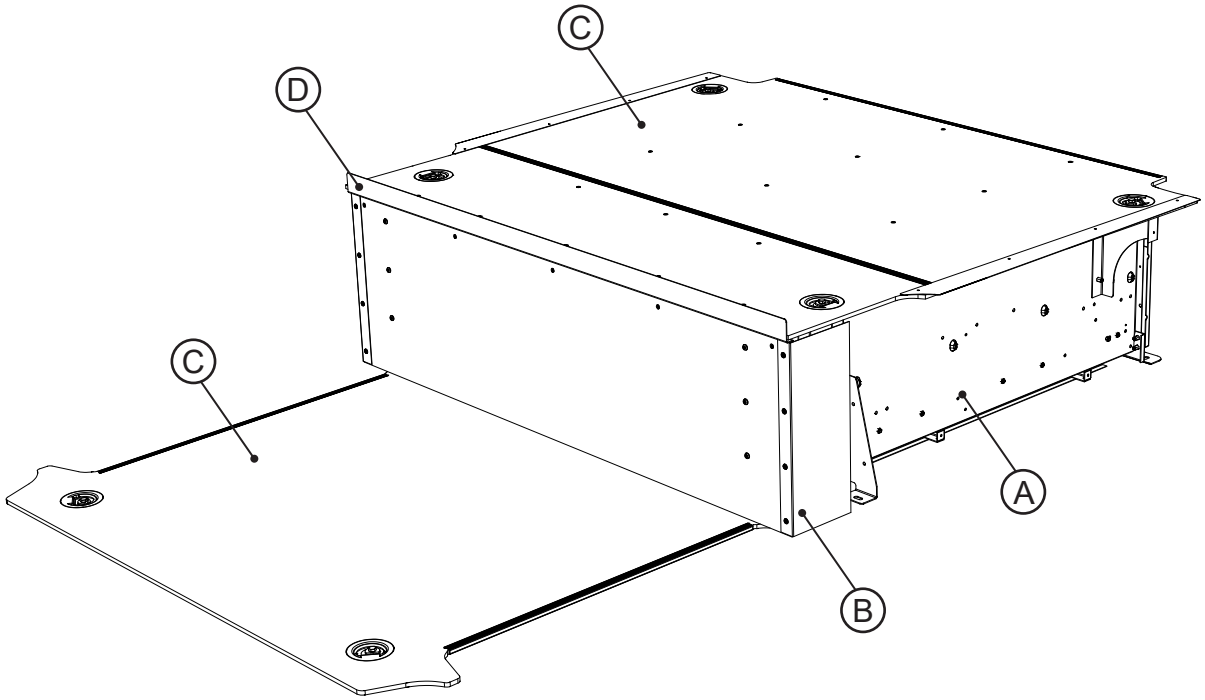

Number	Quantity	Part Number	Definition
A	1	15022501	Rear Drawer RD W1140 L1200
B	1	15025458	Steelbracket Set Rear Mod Drawer L1 L2 L3 PEJ SF2020
C	1	15025457	Floor Set Rear Mod Drawer L1 L2 PEJ SF2020
D	1	15025462	Stopper Bracket Rear Mod Drawer PEJ SF2020

15025458 Steelbracket Set Rear Mod Drawer L1 L2 L3 PEJ

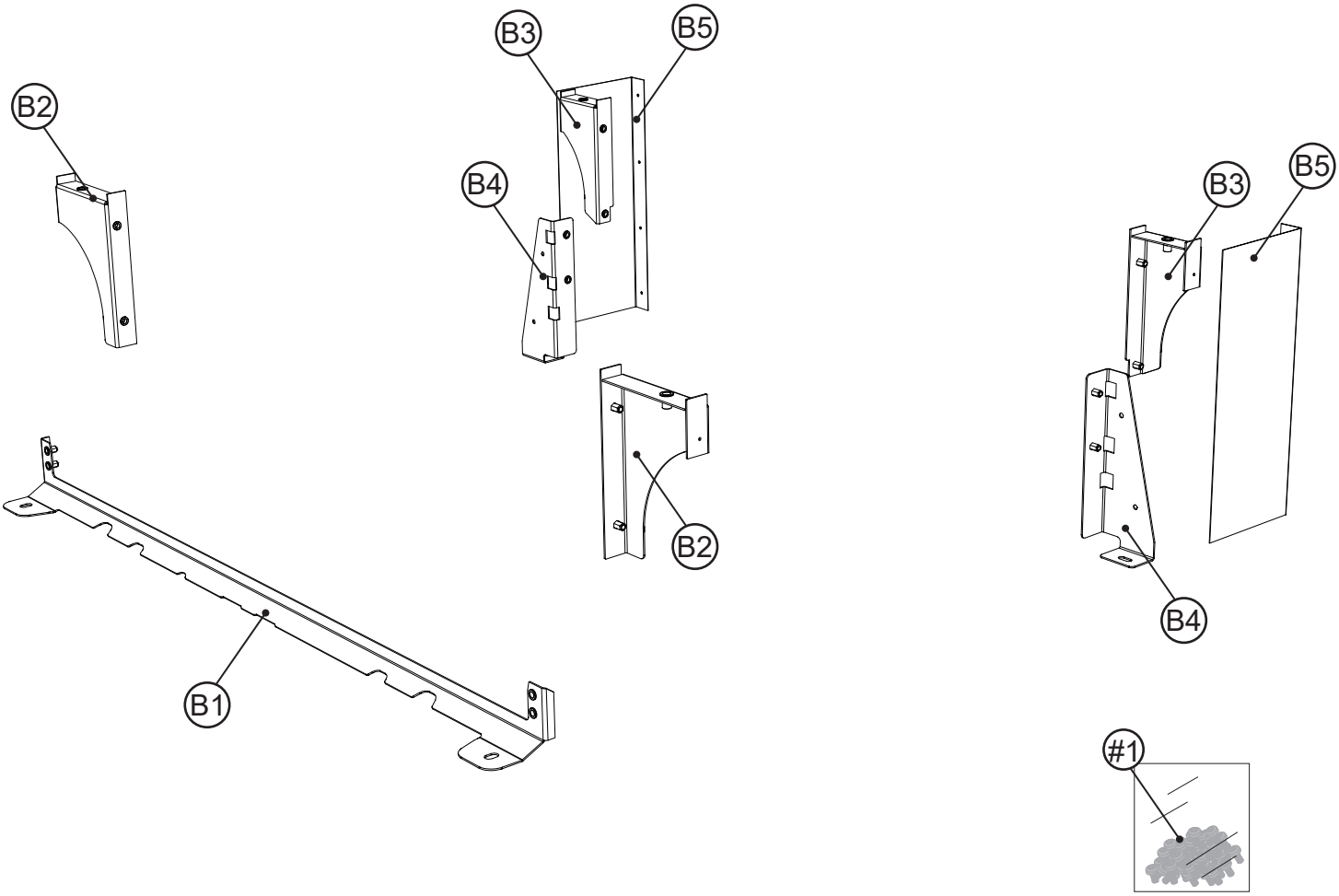

Number	Quantity	Part Number	Definition
B1	1	15021212	Bracket Lower Rear Middle PEJ2020 ASSY
B2	2	15018461	Bracket Latchcup Side M8 SF 2020 ASSY
B3	2	15021233	Bracket Latchcup Side M8 Narrow ASSY
B4	2	15021218	Bracket Middle PEJ2020 ASSY
B5	2	15025464	Cover Front Side Rear Mod Drawer PEJ SF2020
#1	1	15025466	Fitting Kit Steelbracket Set Rear Mod Drawer PEJ SF2020

15025457 Floor Set Rear Mod Drawer L1 L2 PEJ

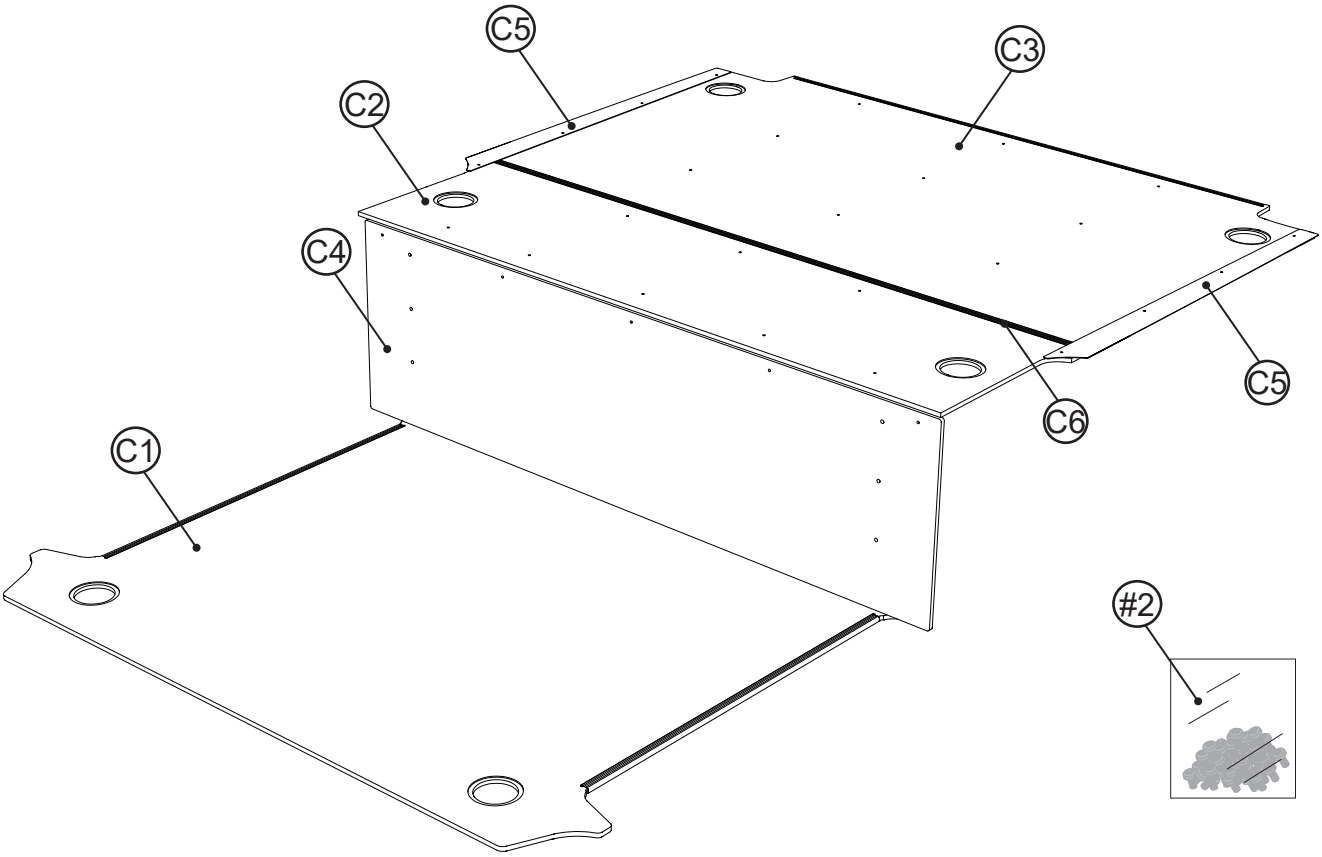

Number	Quantity	Part Number	Definition
C1	1	15025456	Floor Front Rear Mod Drawer L1 L2 PEJ SF2020
C2	1	15025463	Floor Middle Rear Mod Drawer PEJ SF2020
C3	1	15024403	Floor Rear L1 L2 L3 PEJ SF2020 ASSY
C4	1	15025459	Vertical Floor Rear Mod Drawer PEJ SF2020
C5	2	15024395	Floor Extend Bracket Rear Side L1 L2 PEJ SF2020
C6	1	15024397	H-profile 9mm L=1550
#2	1	15025465	Fitting Kit Floor Set Rear Mod Drawer PEJ SF2020

15010236 Handle Assy

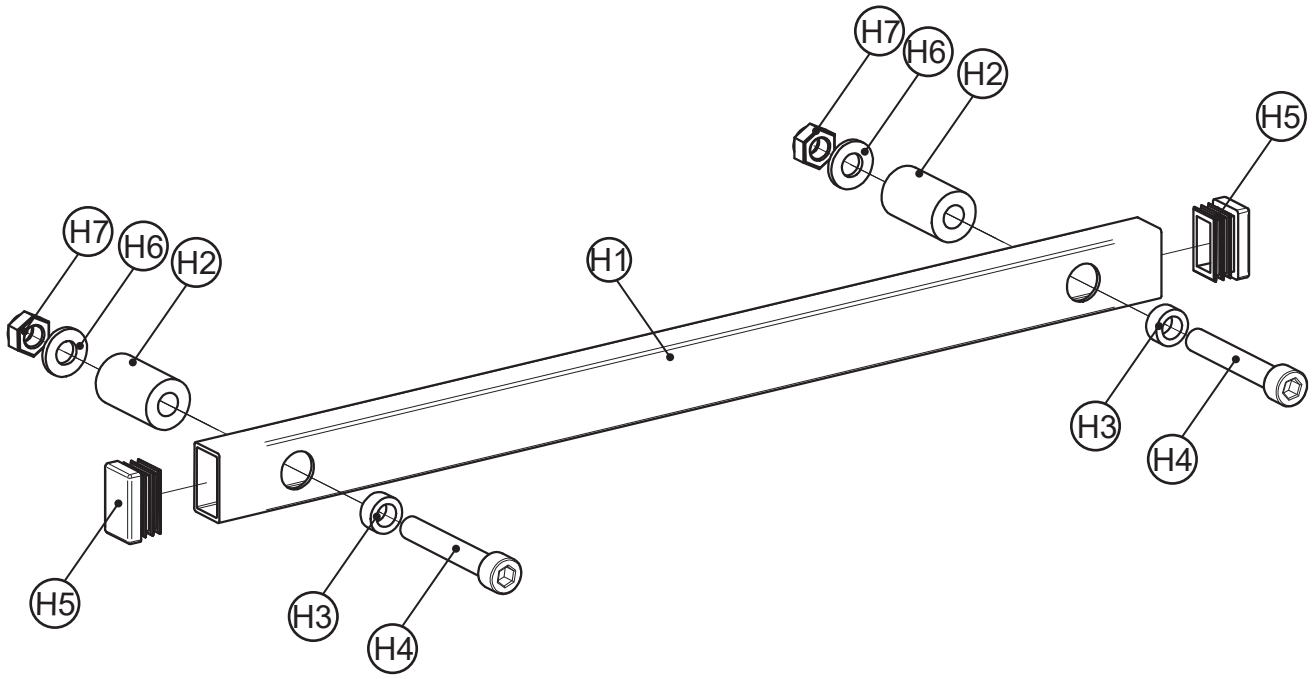

Number		Quantity	Part Number	Definition
H	H1	2	15009441	Handle Tube 25x15x286
	H2	2	15009443	Spacer Ø8,3x18x30 Nylon Black
	H3	2	15009443	Spacer Ø8,1x13x6mm Galv
	H4	2	15009444	Screw M8x50 Cylinderh Hex
	H5	2	15009438	End sleeve Black
	H6	2	8,4x17x2	M8 Washer, DIN 125
	H7	2	8 NMU	Mutter M8 Nyloc DIN985

#1 15025466 Fitting Kit Steelbracket Set Rear Mod Drawer L1 L2 PEJ

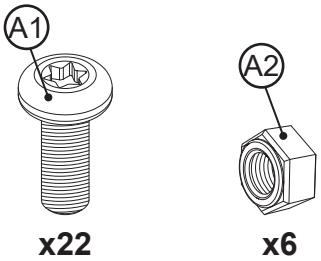

A1	15003551 M6x16 TX30 pan (DIN 7985)
A2	6 NMU M6 Self locking nut, DIN 985-8

#2 15025465 Fitting Kit Floor Set Rear Mod Drawer PEJ

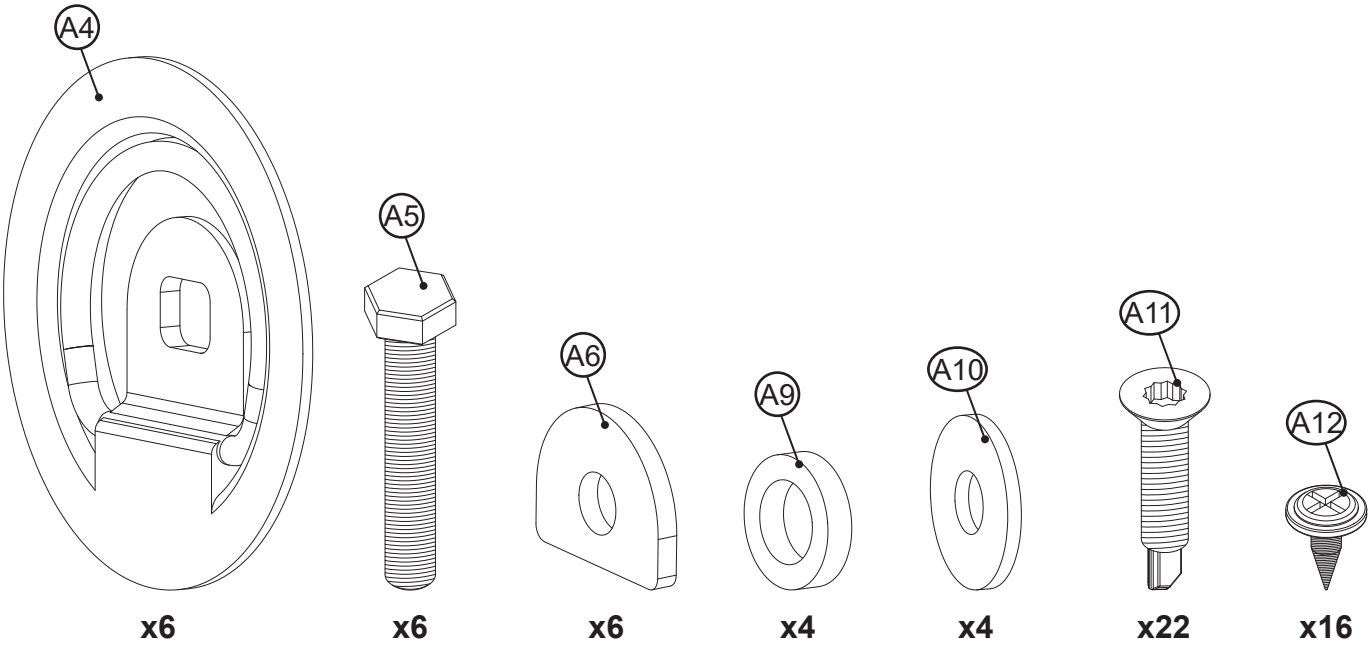

A4	15005497 Latch Cup Black Ø90 Ø12x15 1000Kp
A5	15004713 M8x50 screw, 6K DIN 933 Black, ElZn+Cr3
A6	15005884 Washer Latchcup for Ø8
A9	11,3x18x4mm Plastic Spacer B-219
A10	15004714 Washer 8,4x23x2mm DIN 9021 Black, ElZn+Cr3
A11	15016947 Screw 4,8x25 Selfdrill Counters EW25 Elz
A12	4,2x13 S Screw 4,2x13 Flathead Needle Black

1

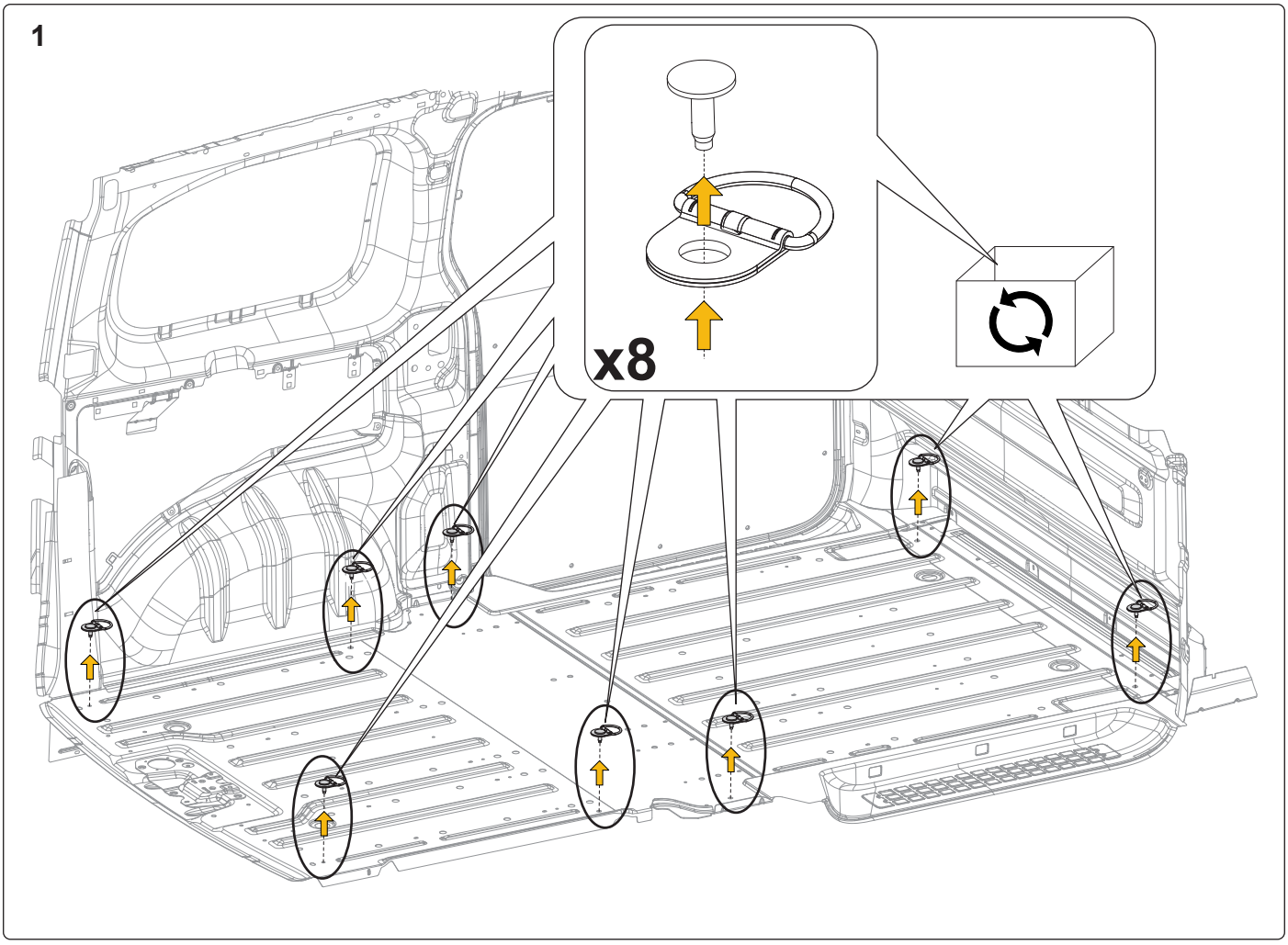

2

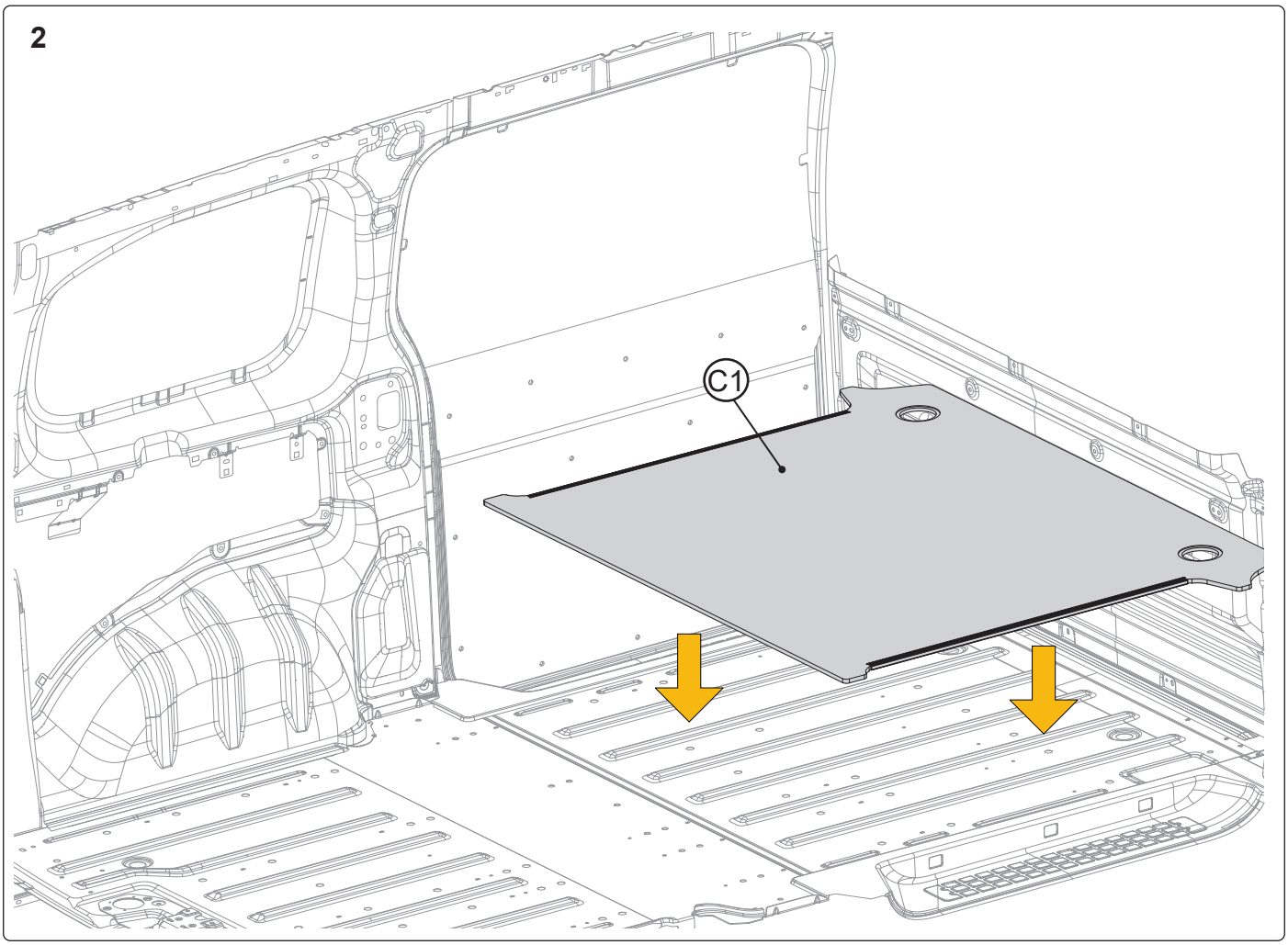

3

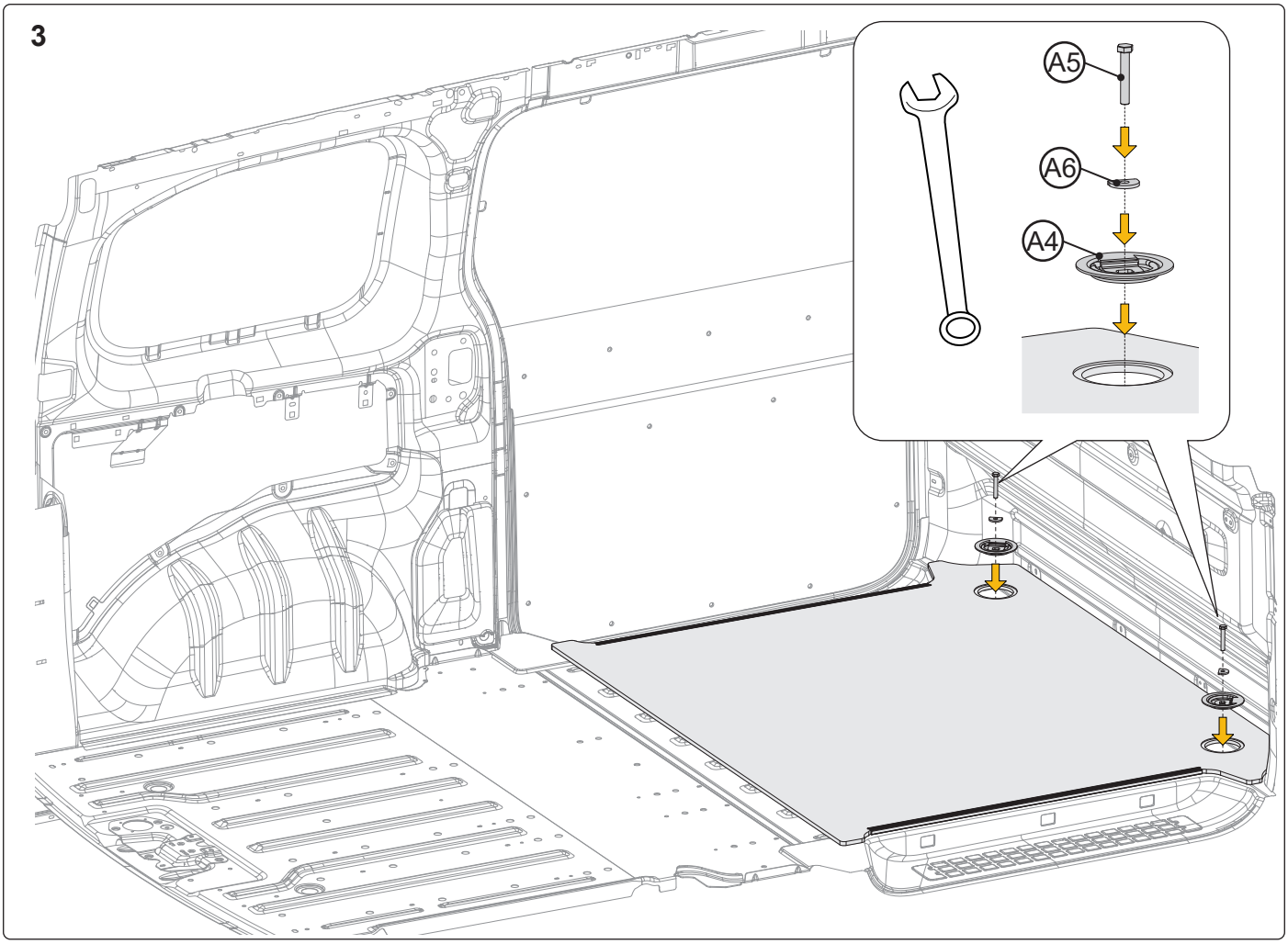

4

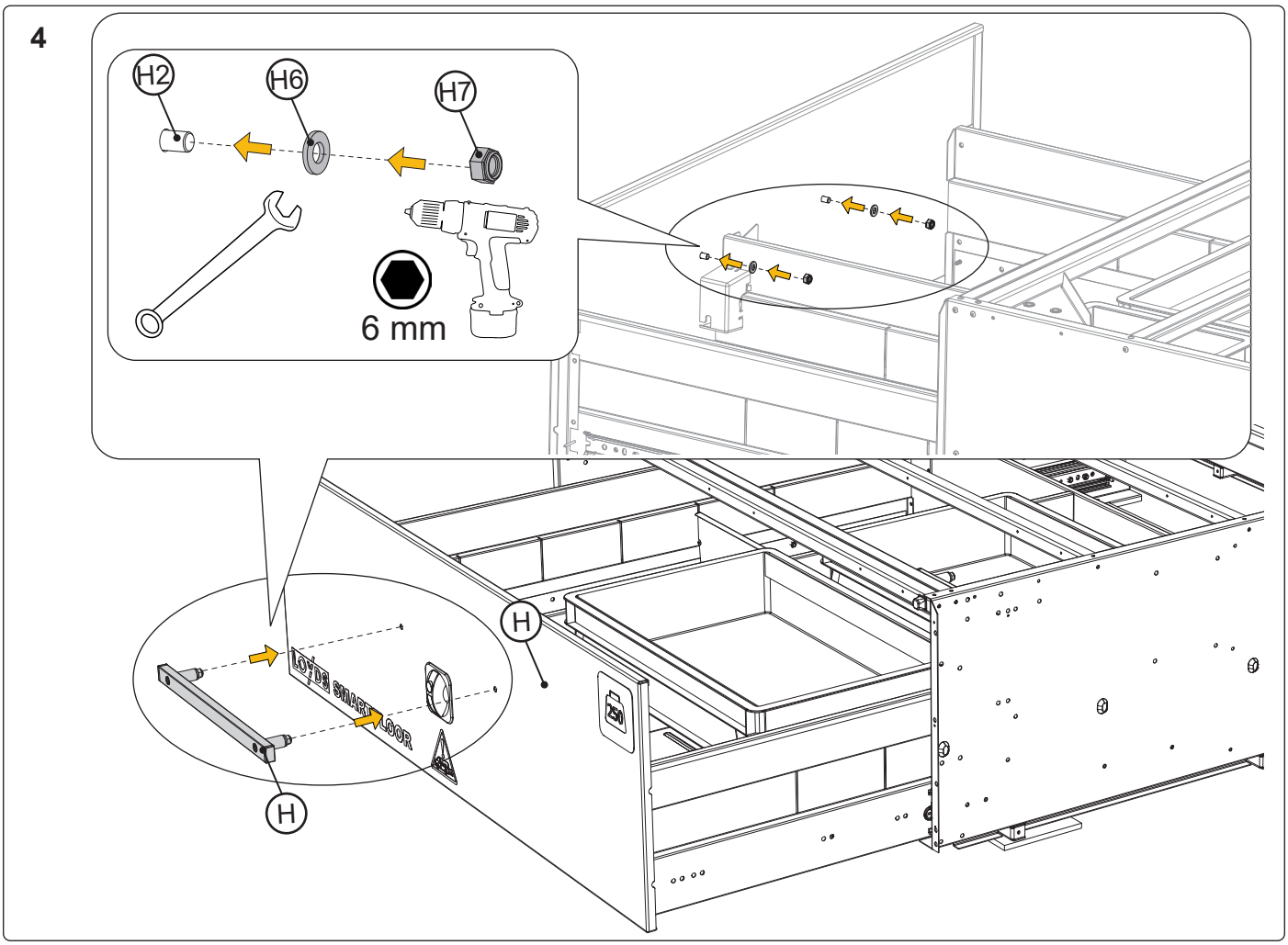

5

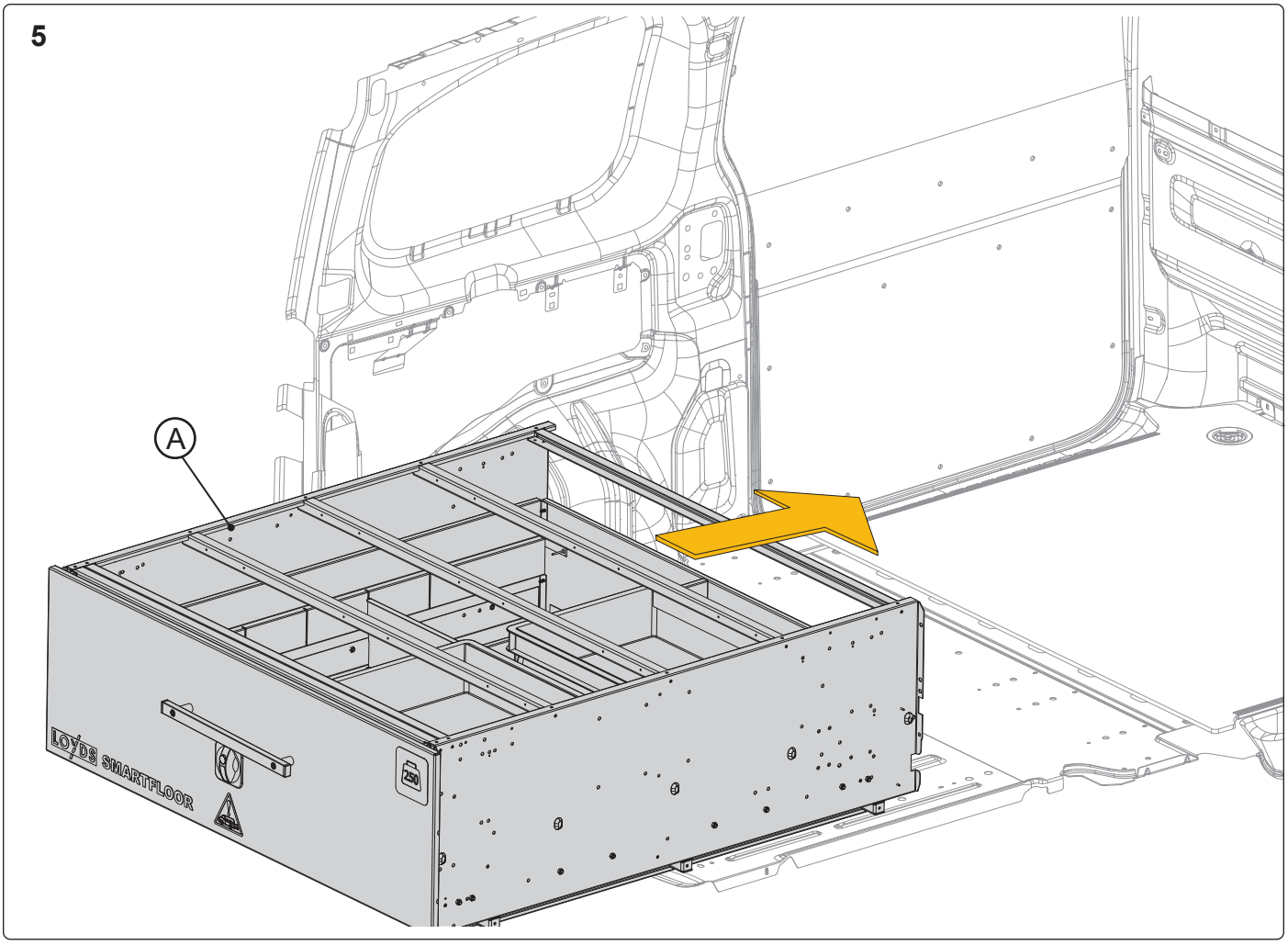

6

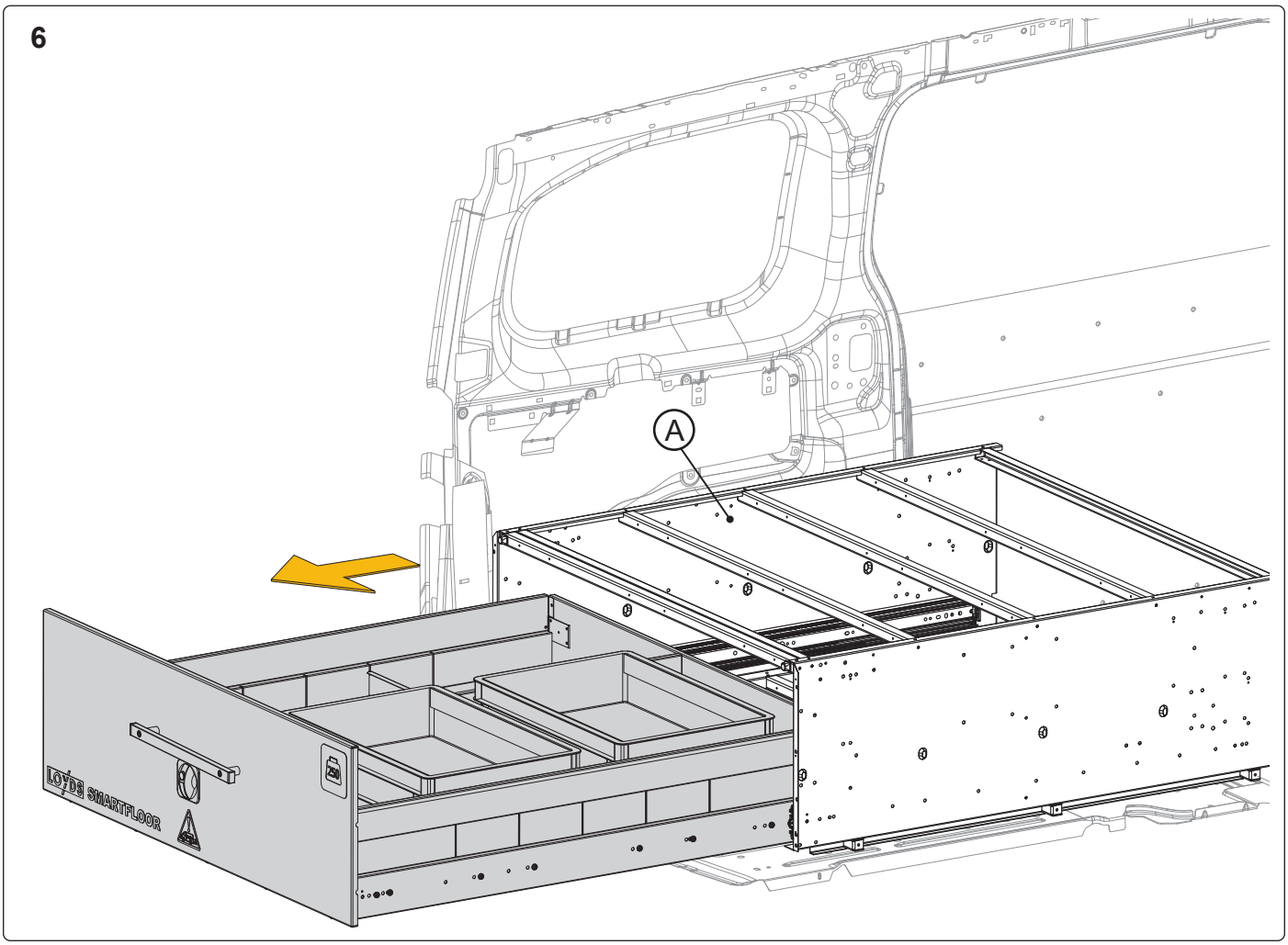

7

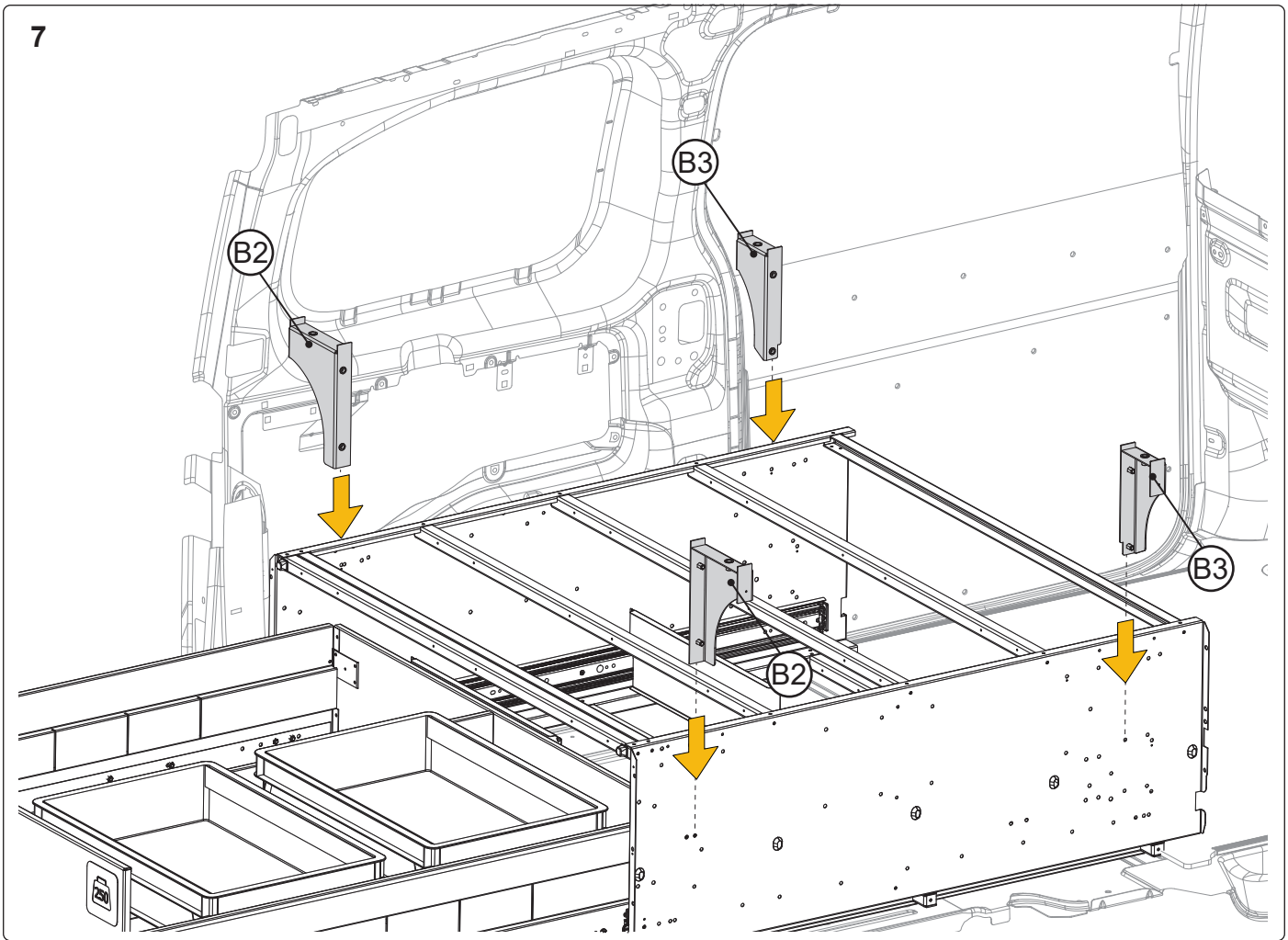

8

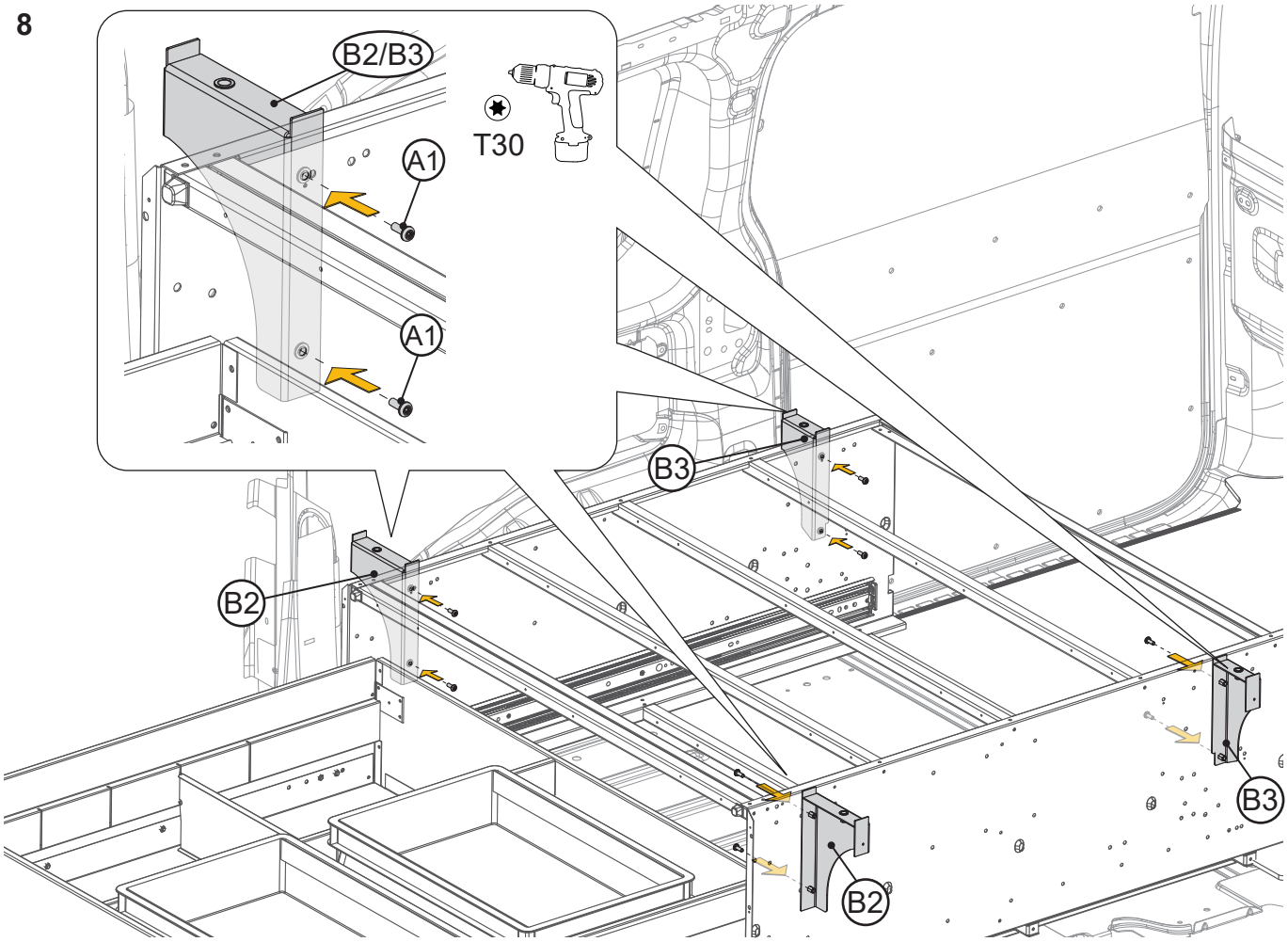

9

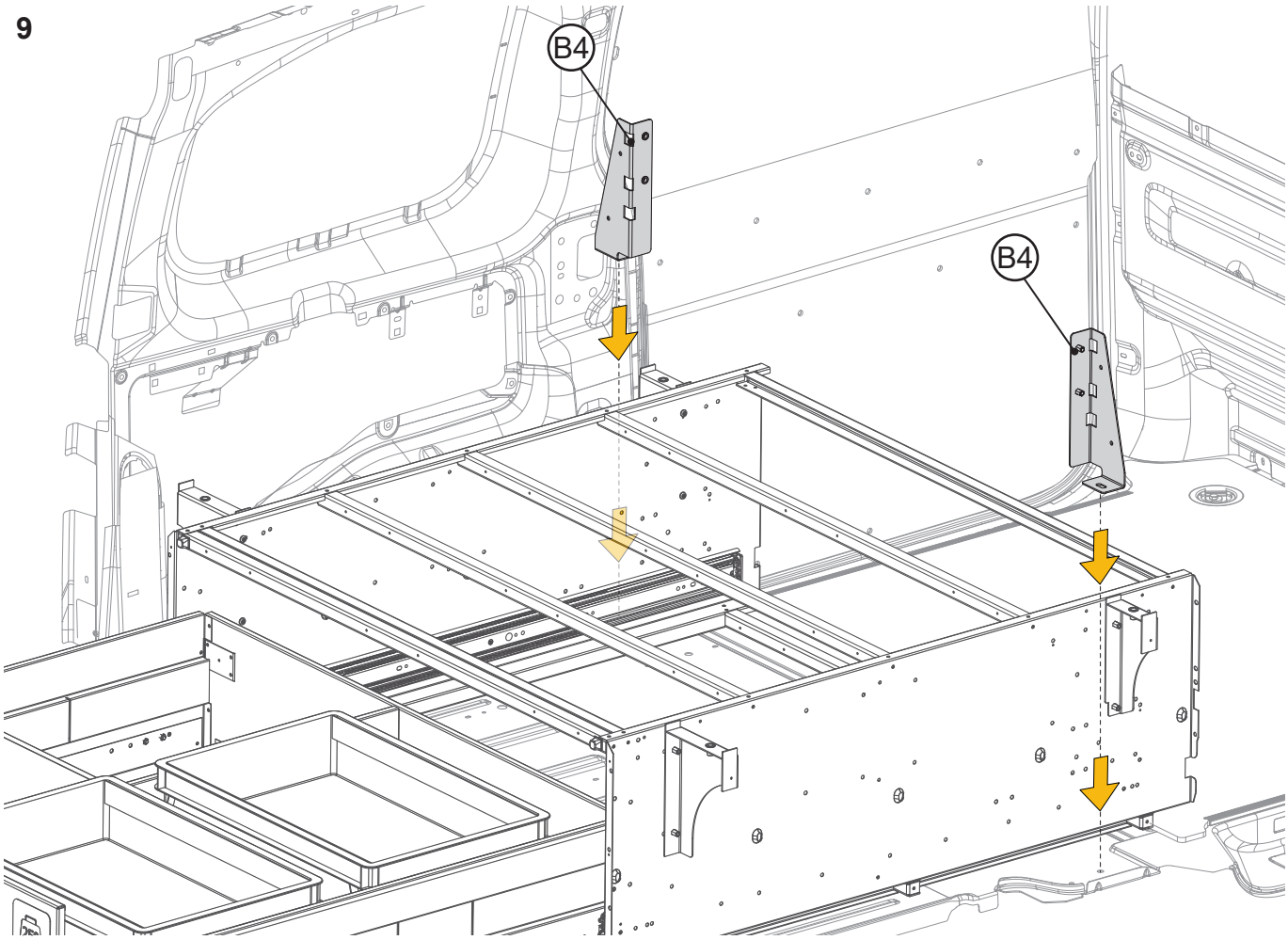

10

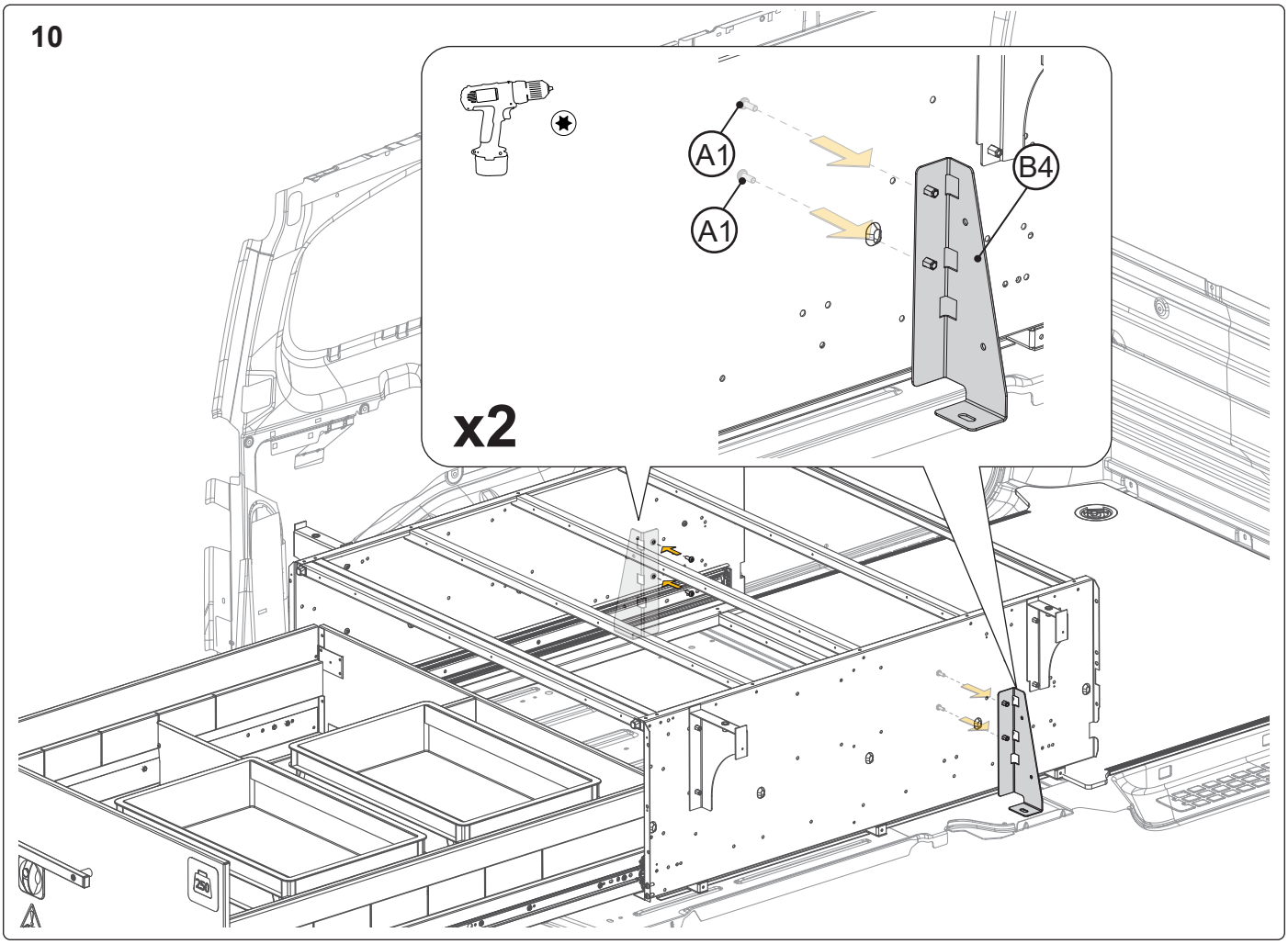

11

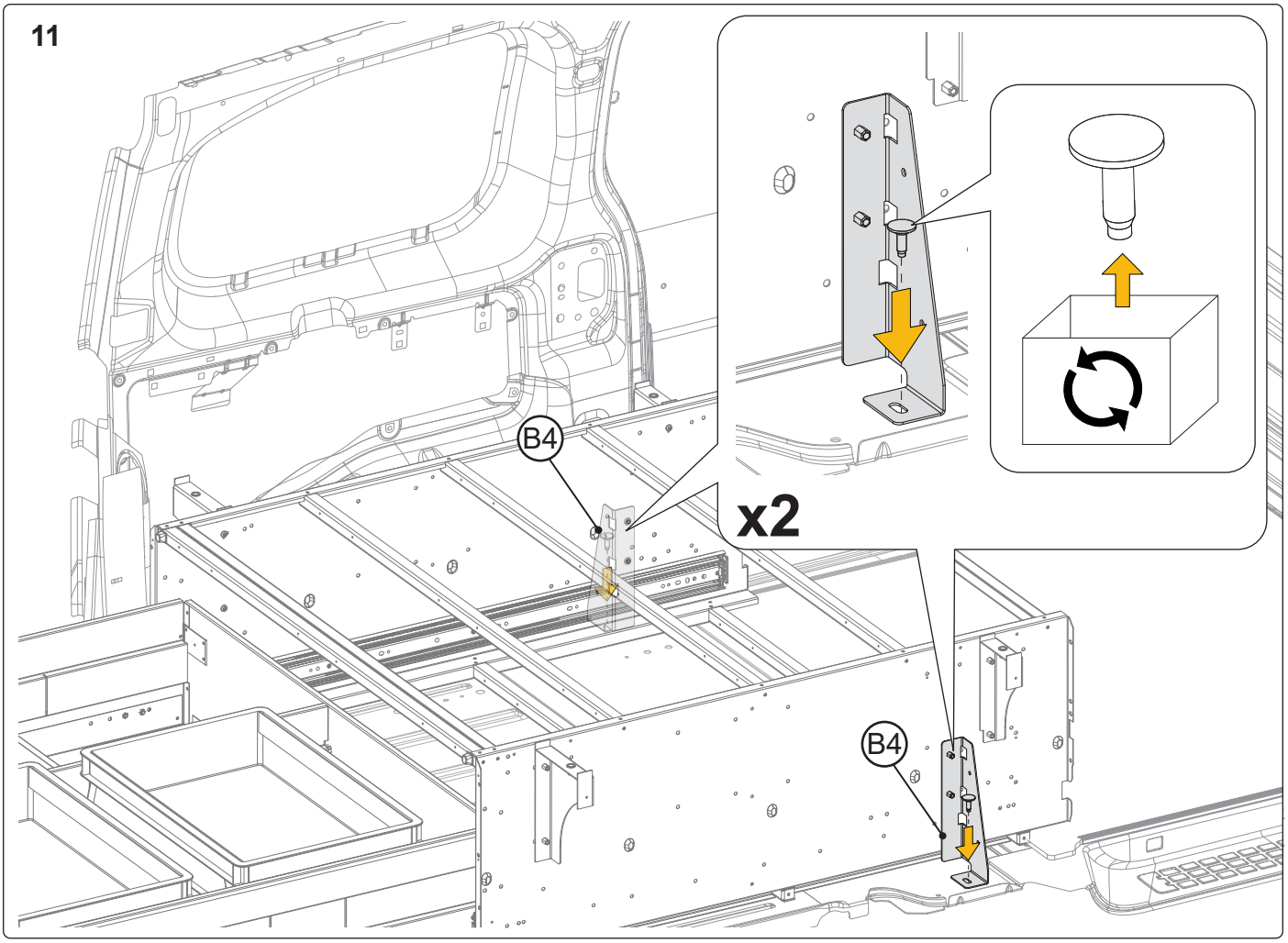

12

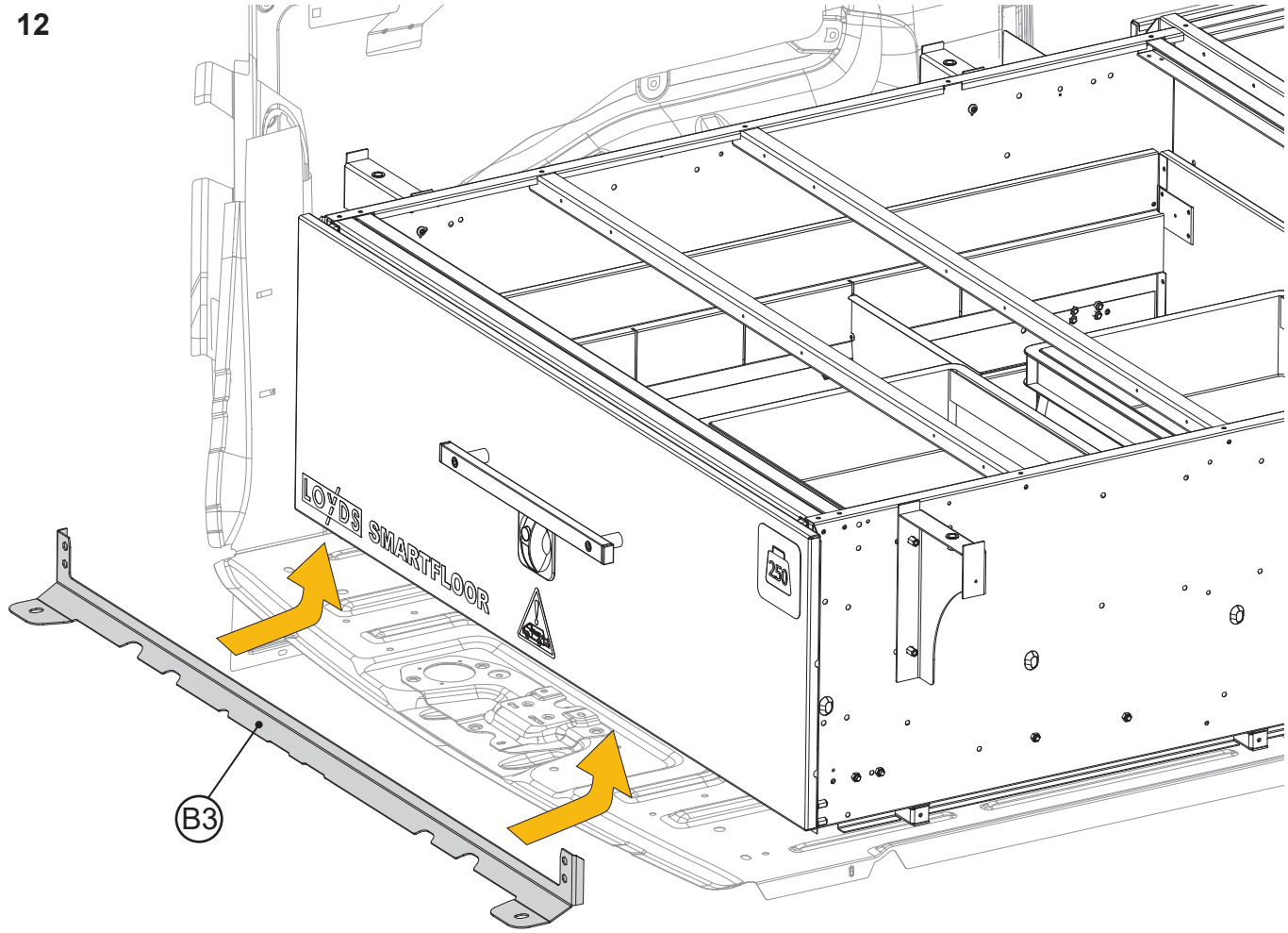

13

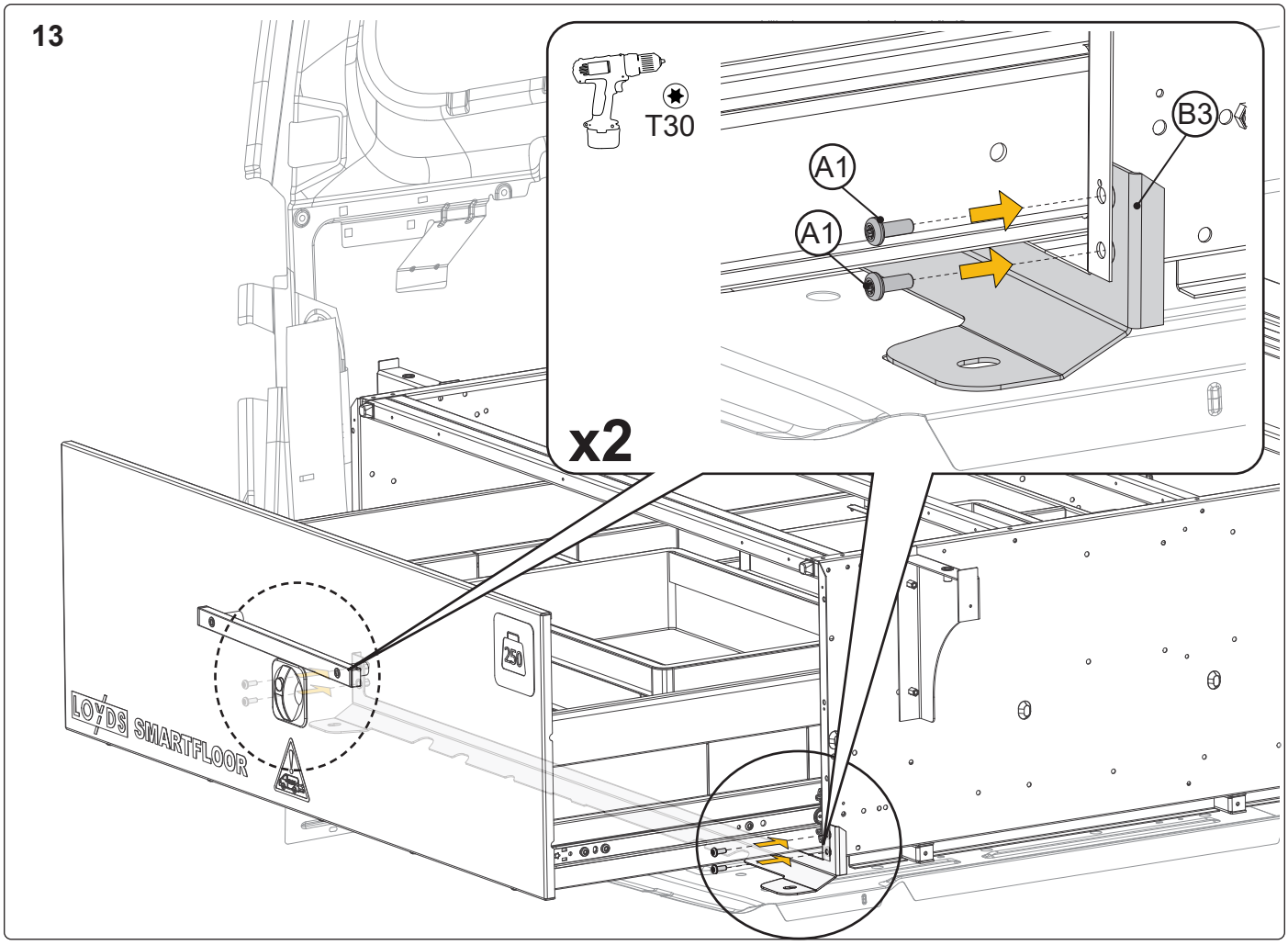

14

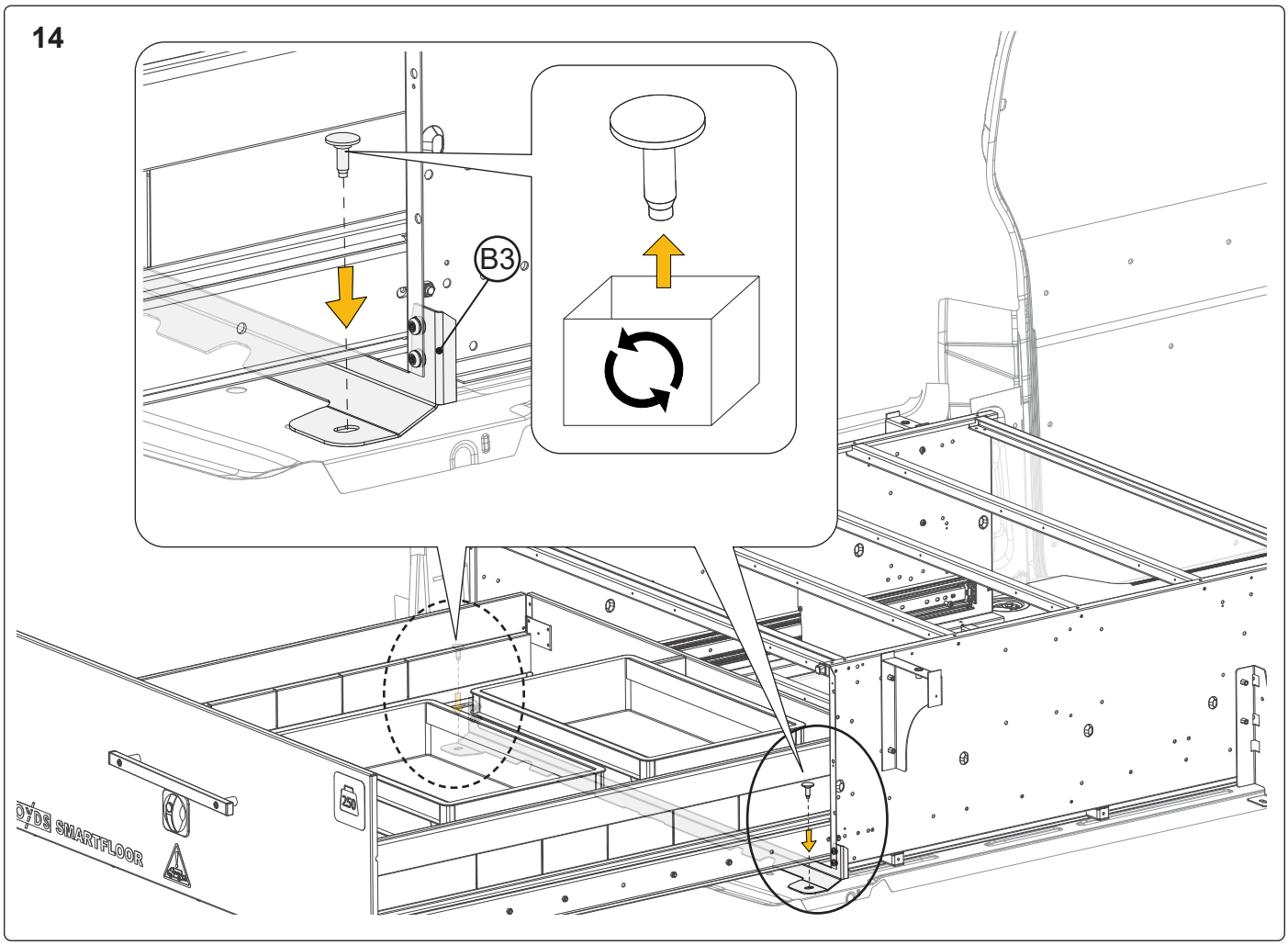

15

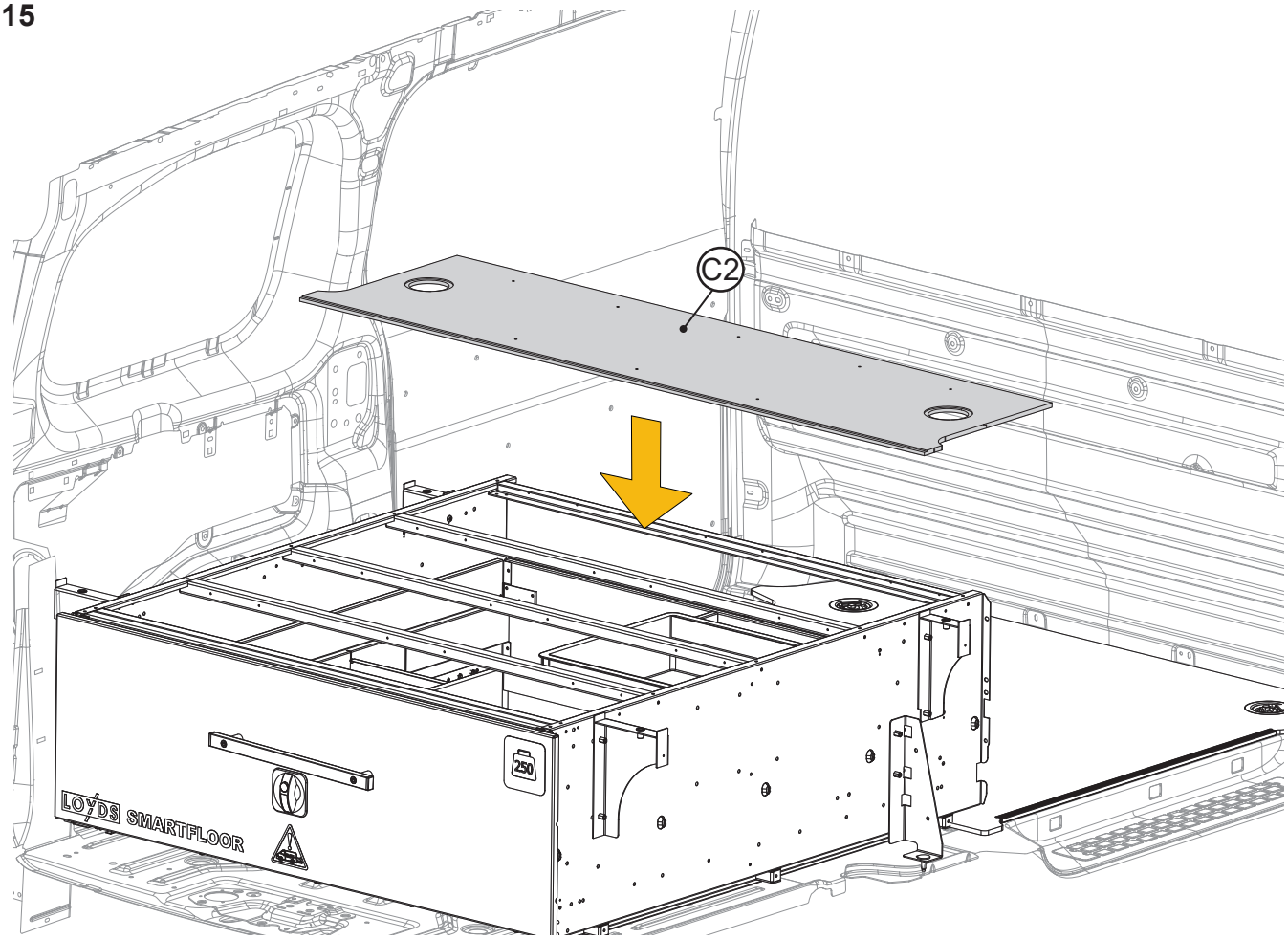

16

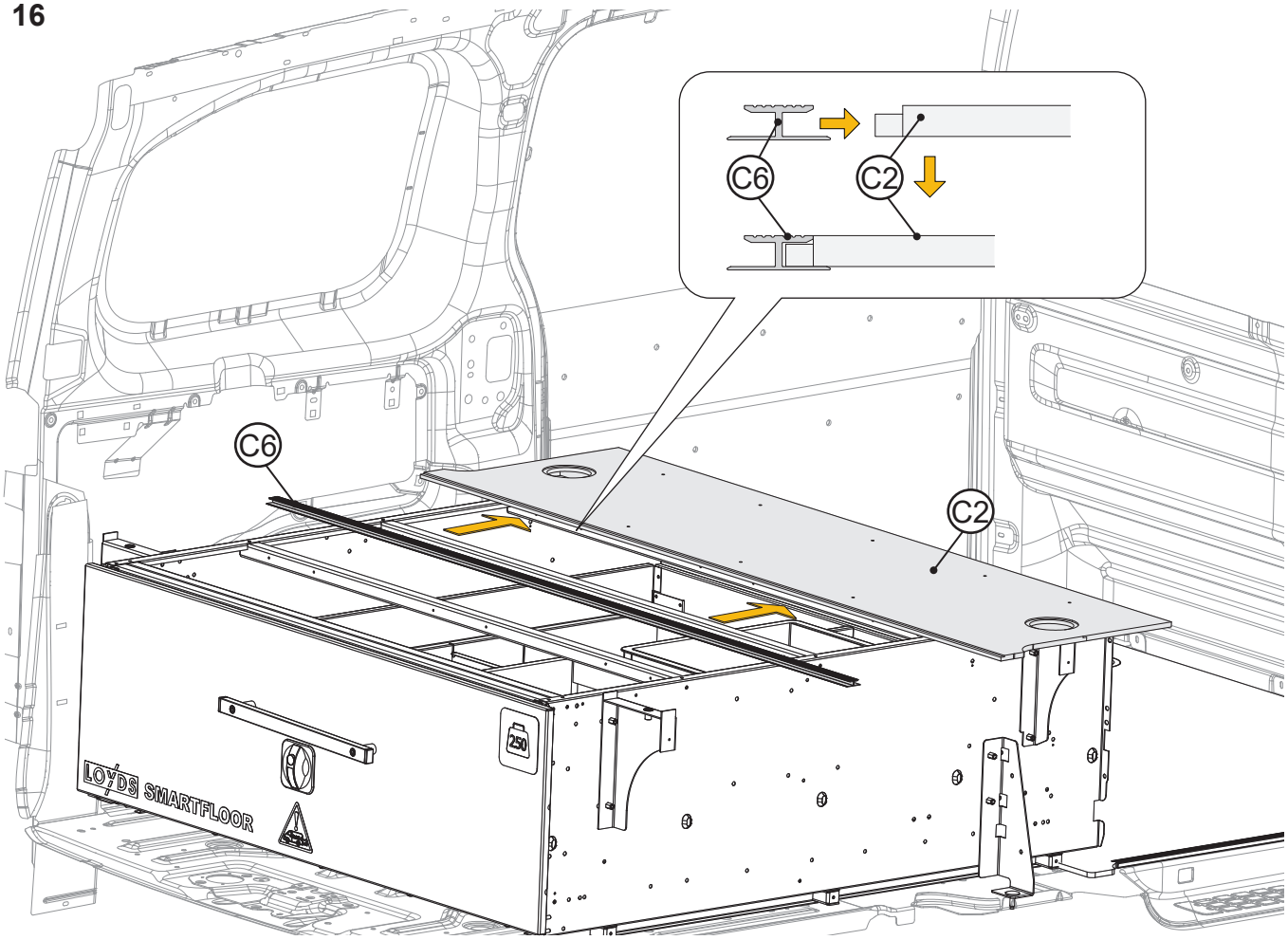

17

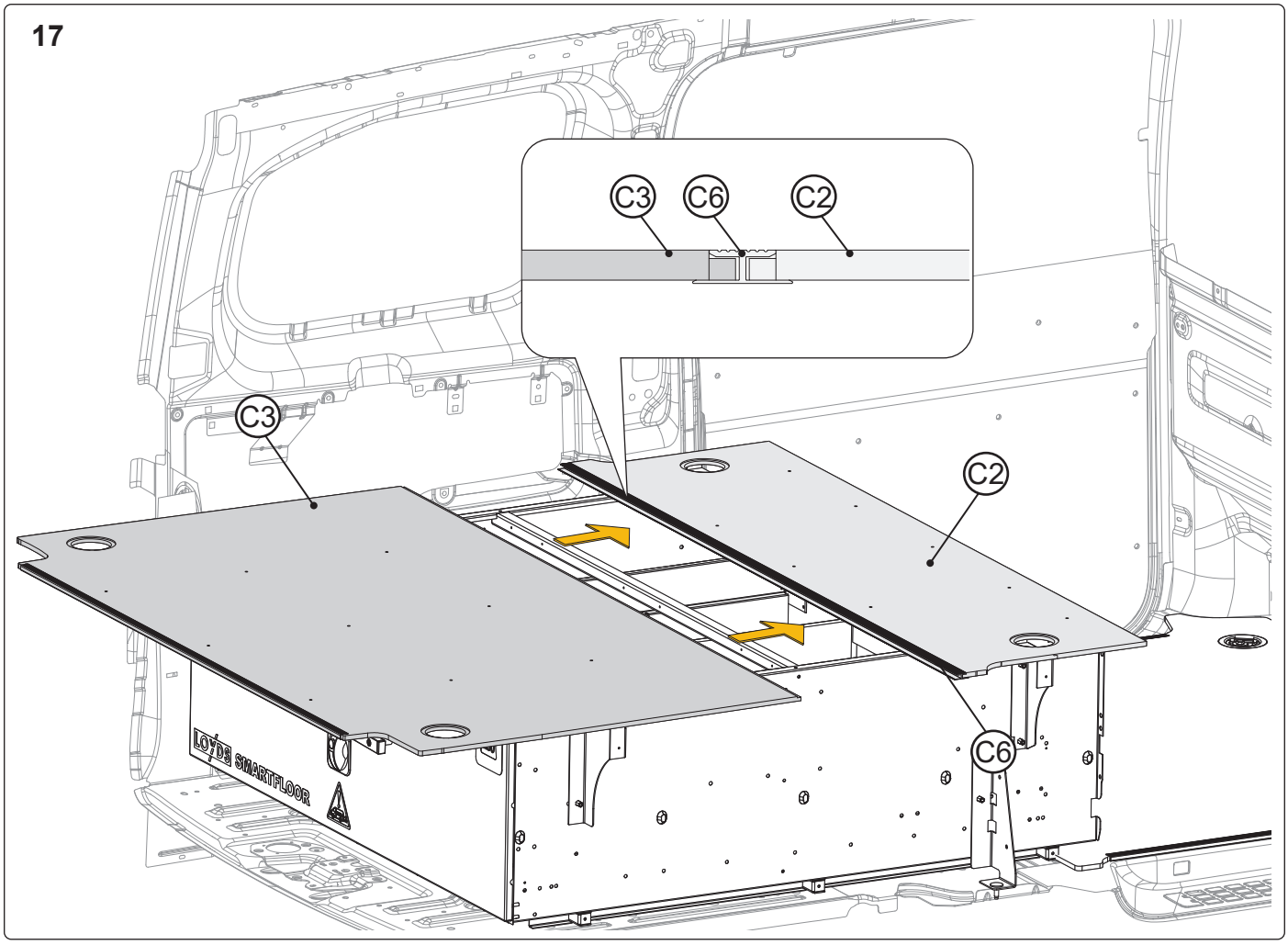
C3
C6
C2
C3
C2
C6
LOYDS SMARTFLOOR

18

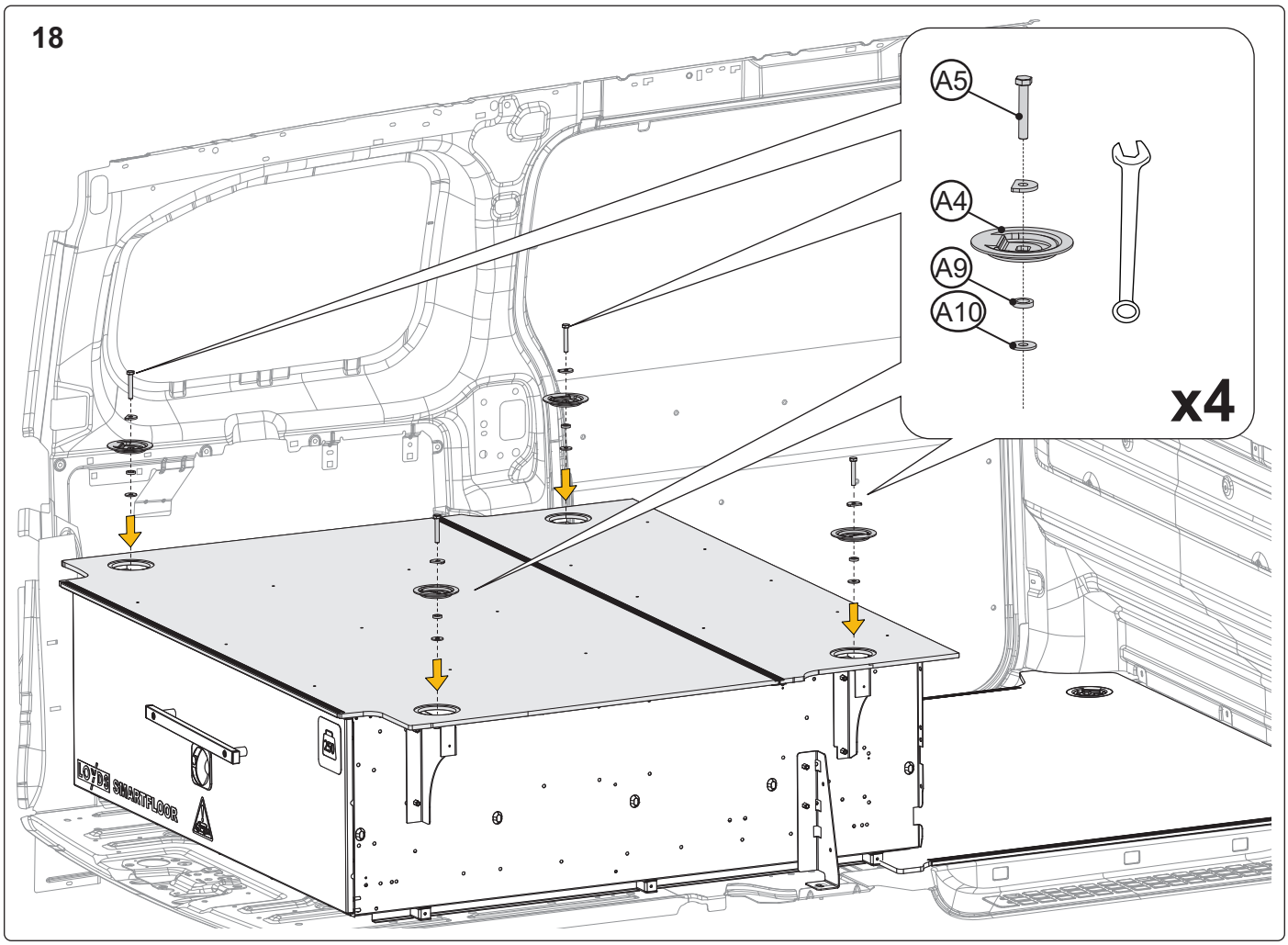
A5
A4
A9
A10
x4
LOYDS SMARTFLOOR

19

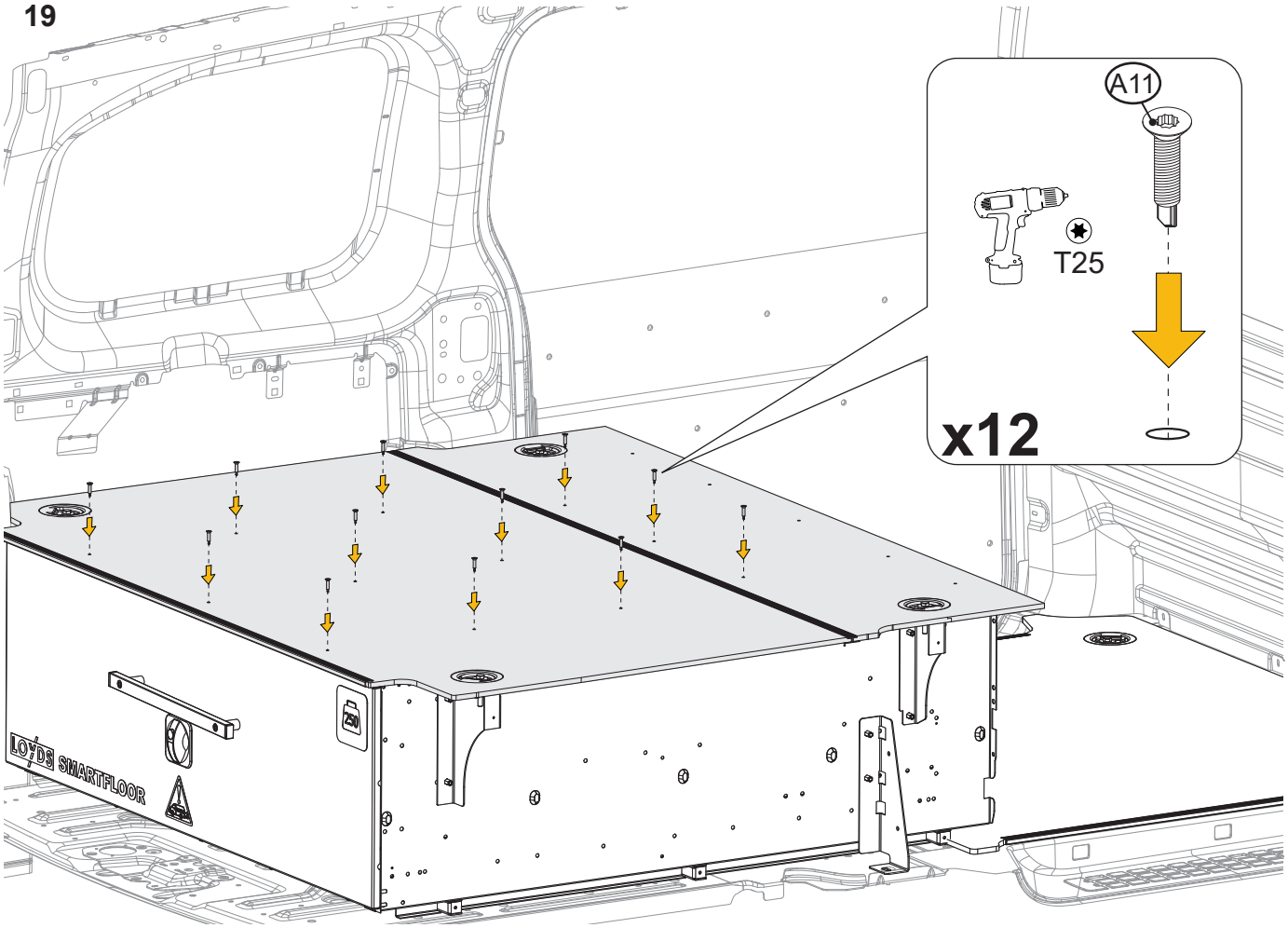

20

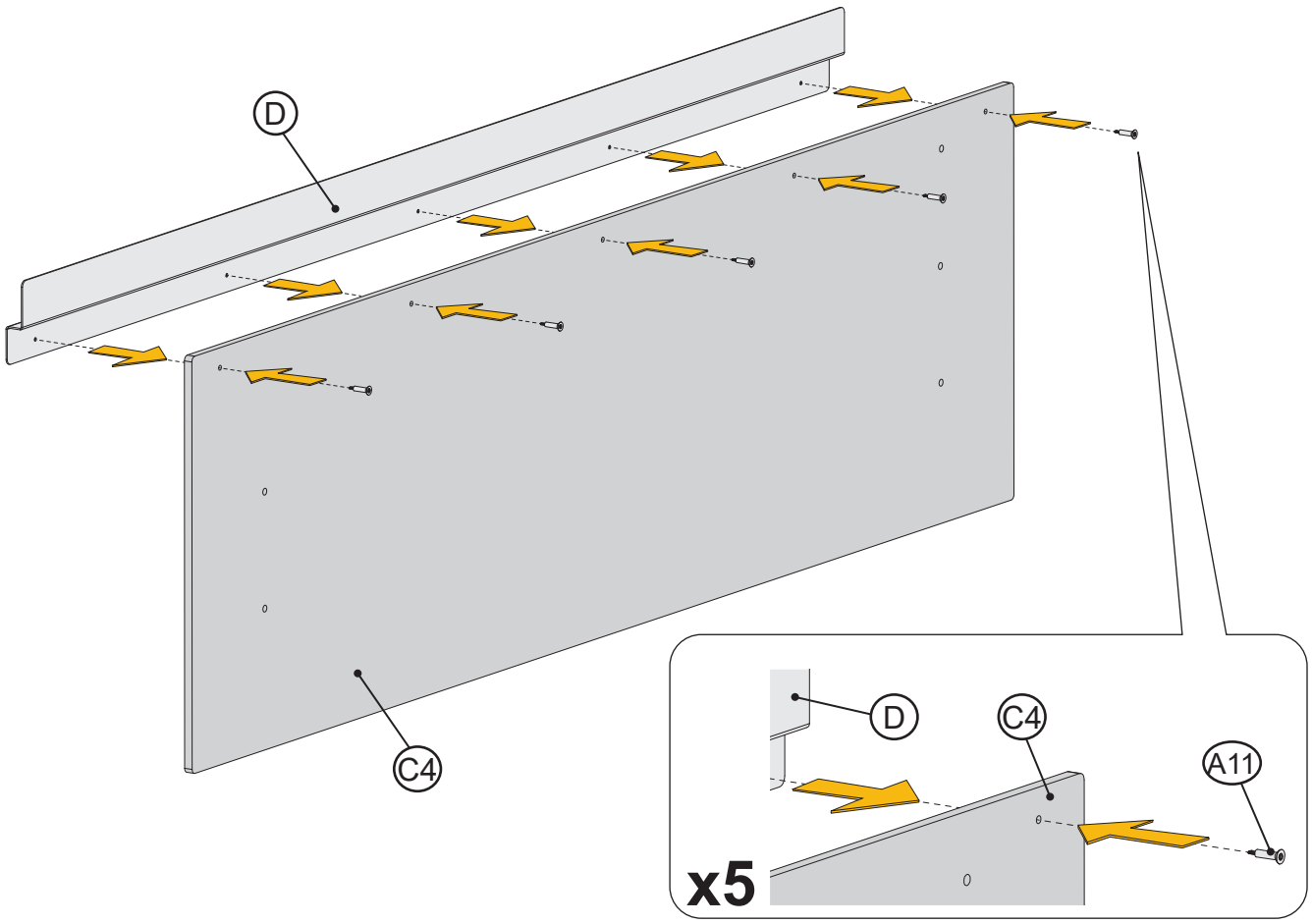

21

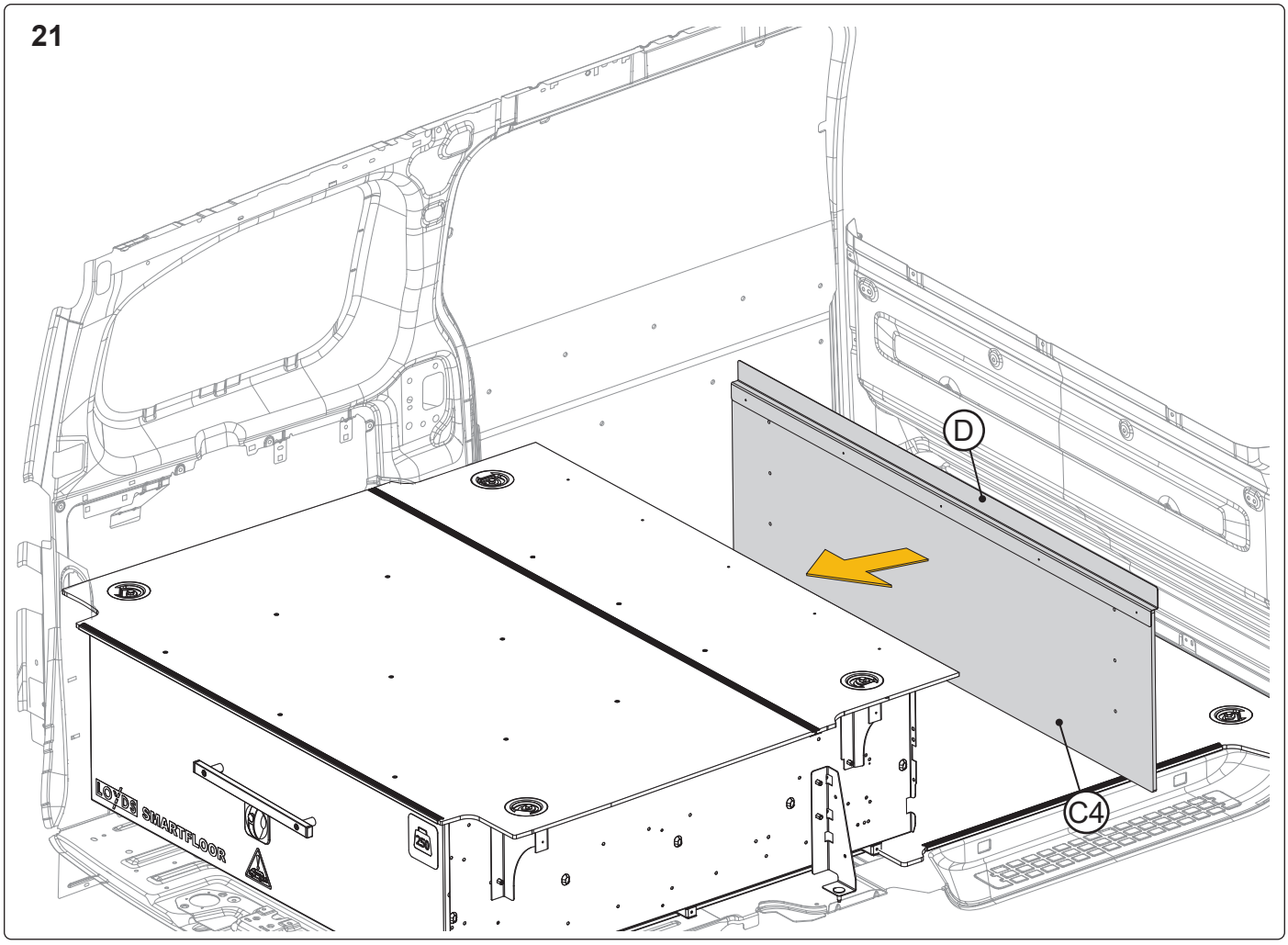

22

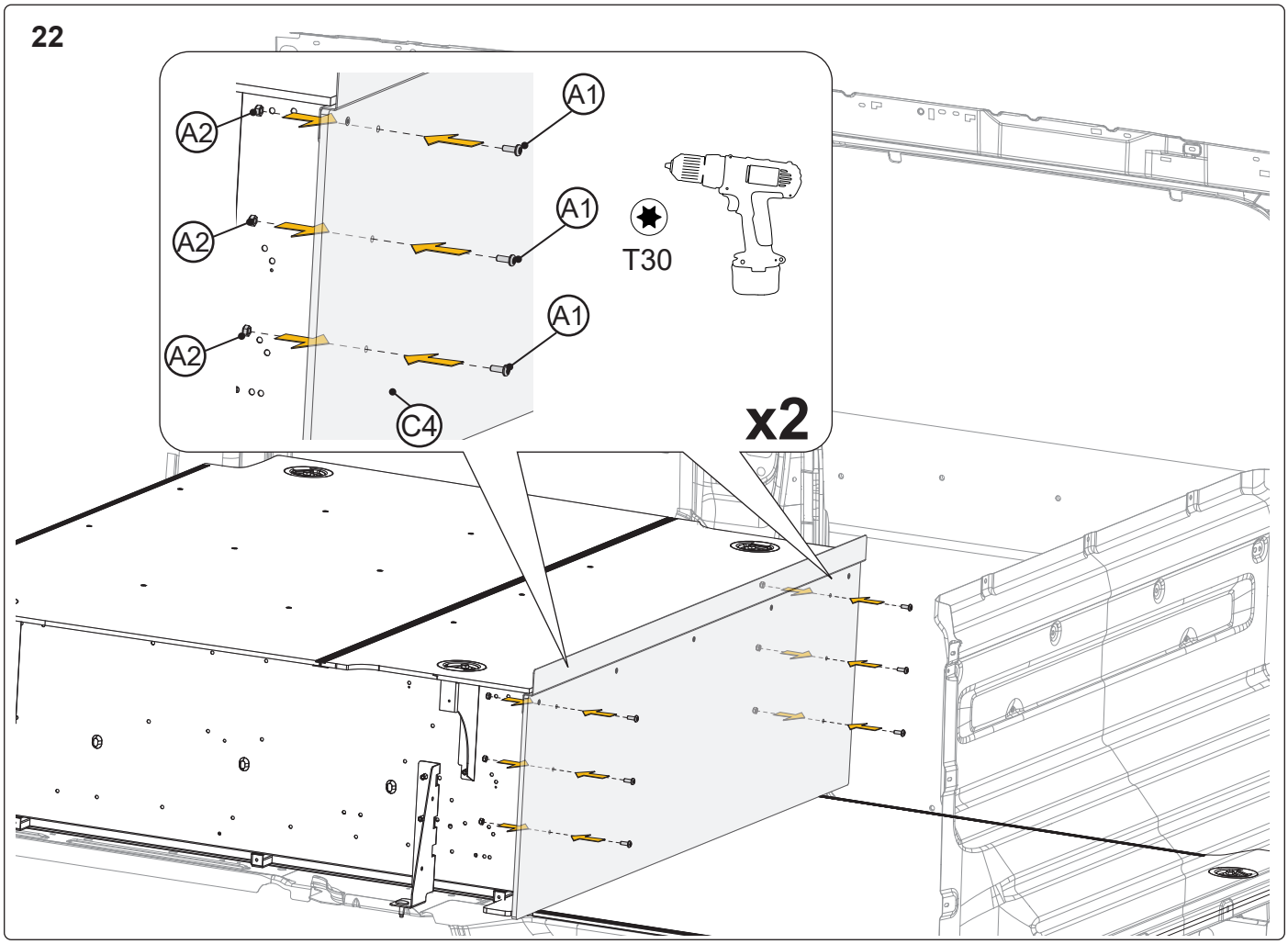

23

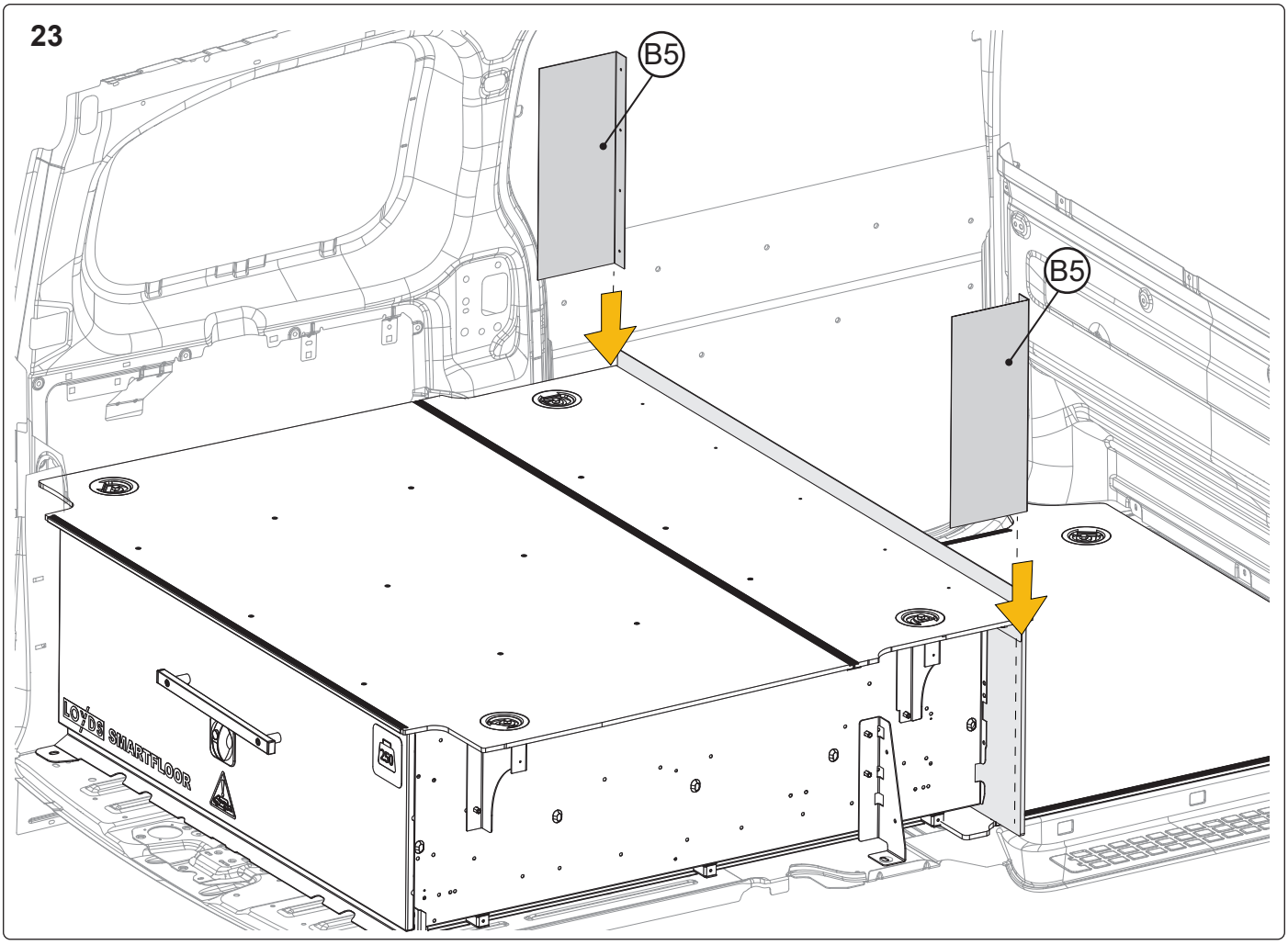

24

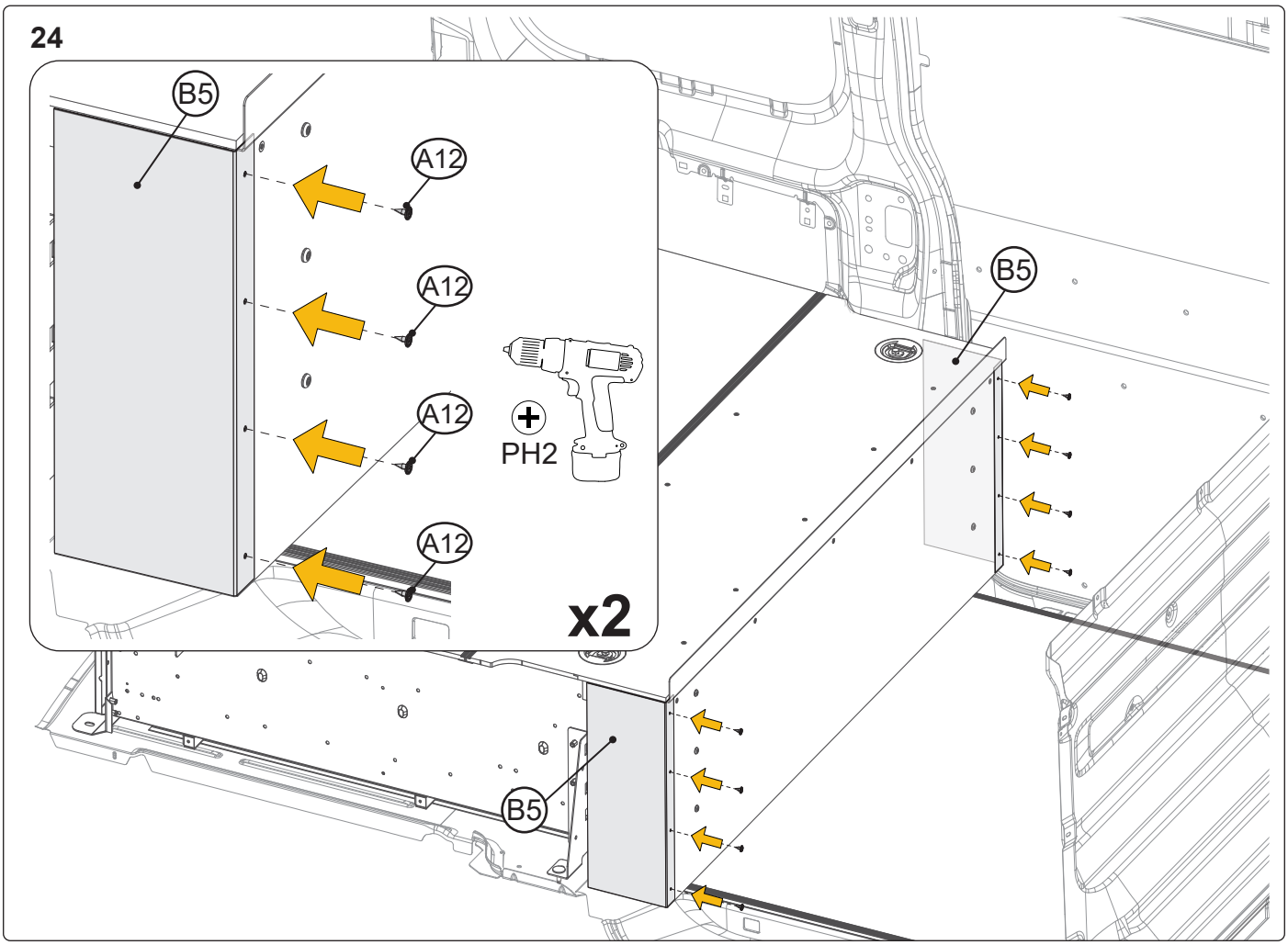

25

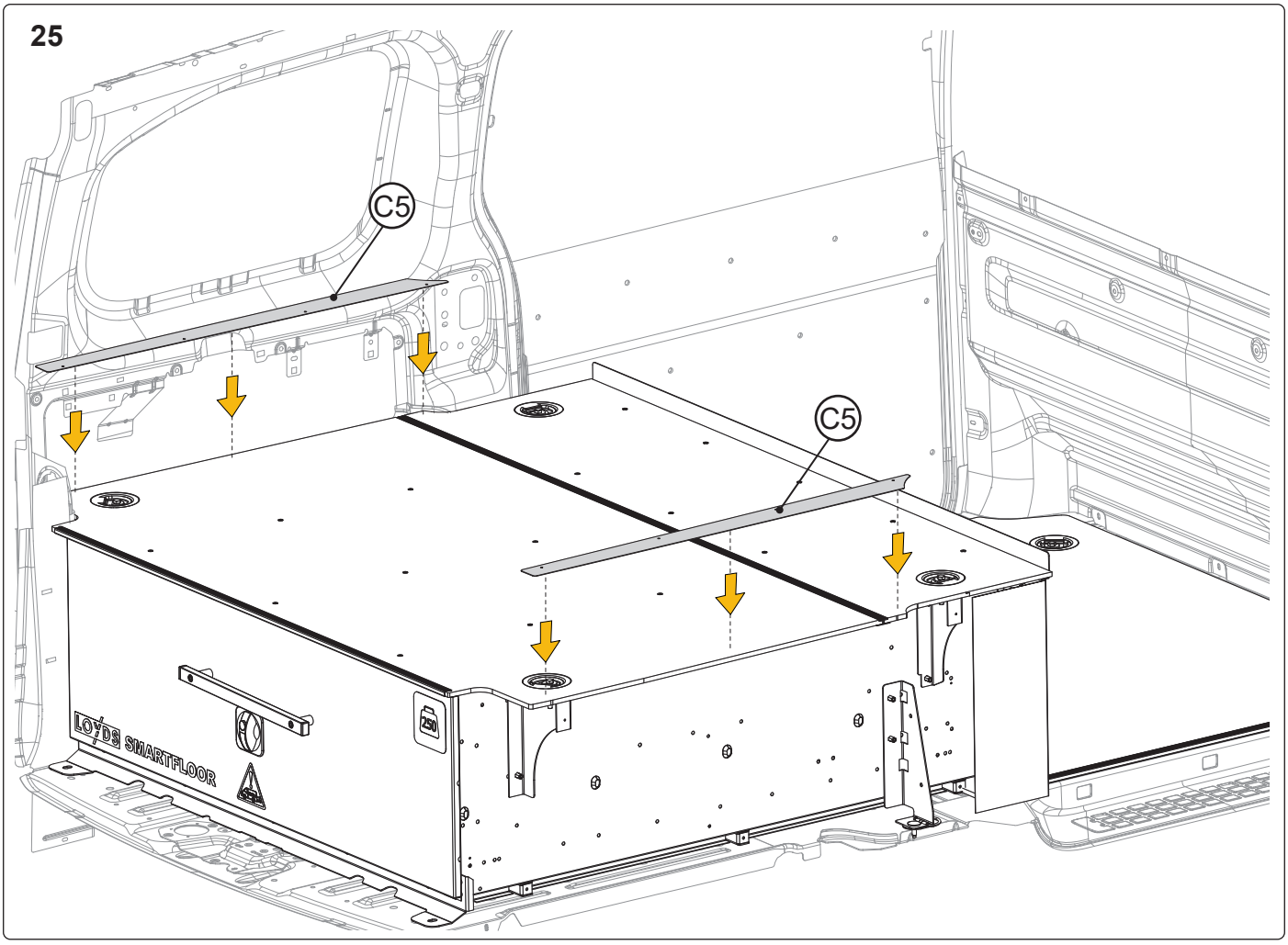

26

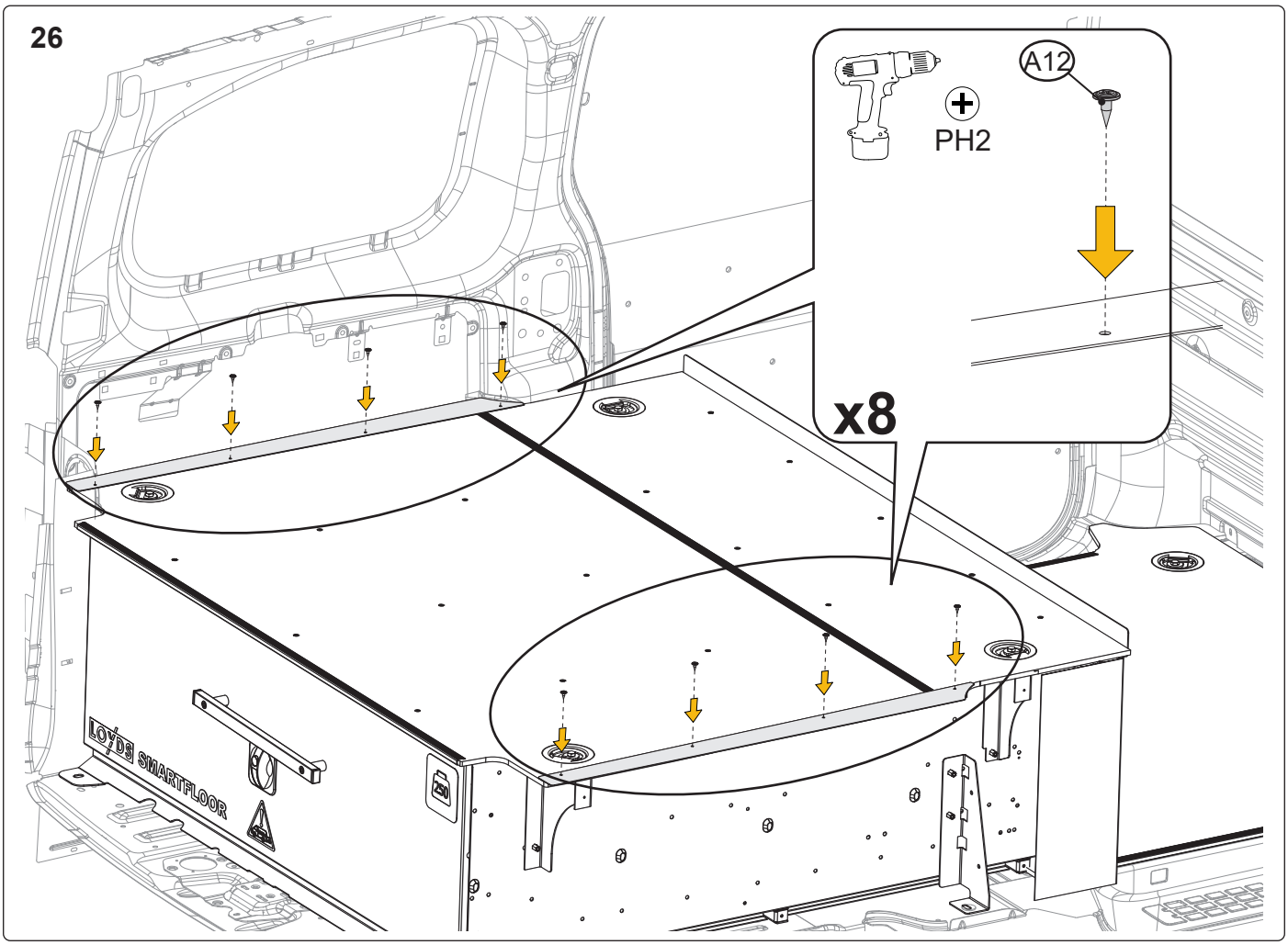

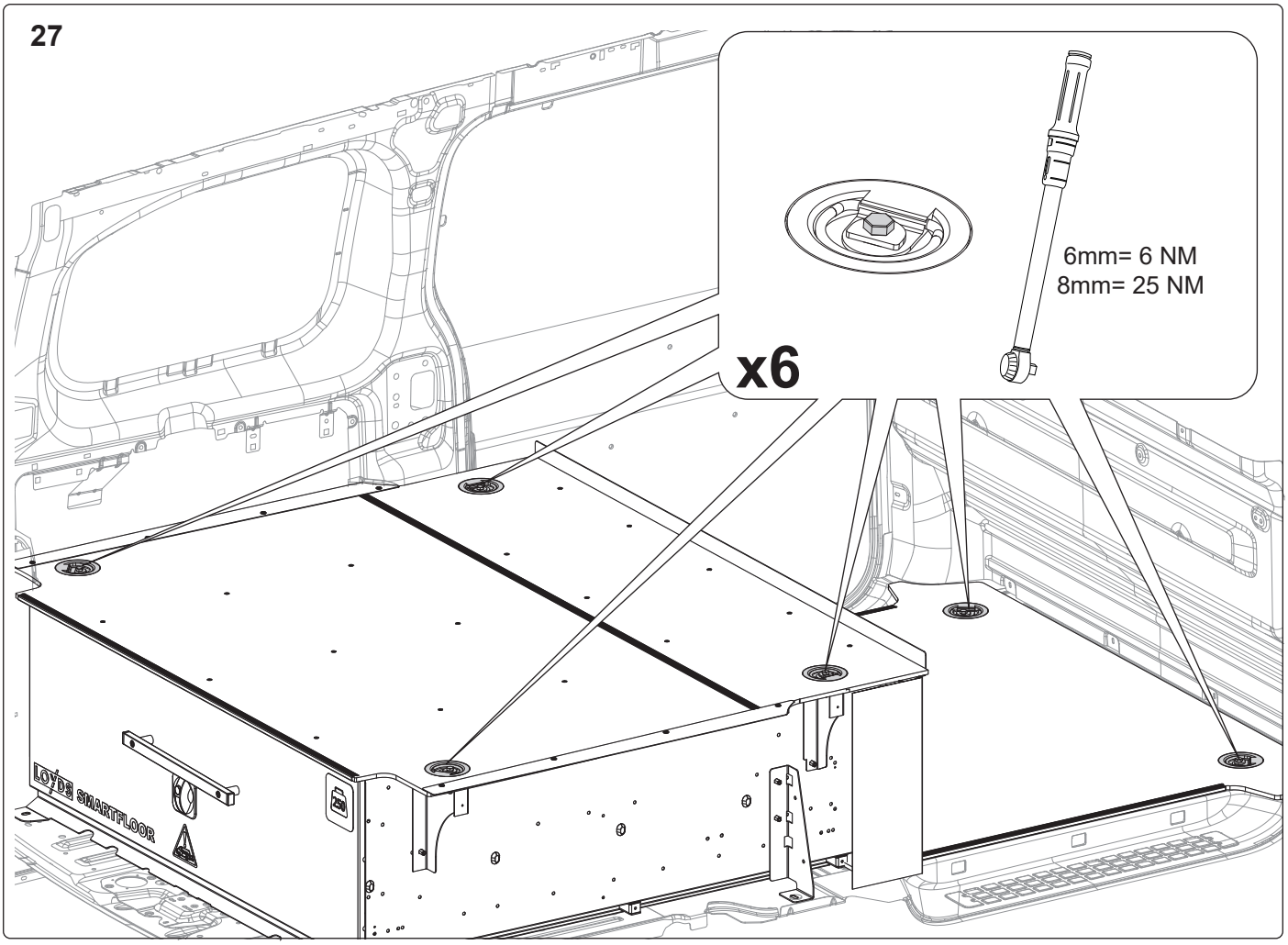
27
x6
6mm= 6 NM
8mm= 25 NM
LOYDS SMARTFLOOR